HVLS - HIGH VOLUME LOW SPEED FAN : OPEN WEB STEEL JOIST MULTI TOP MOUNT

REV #1 11/6/23

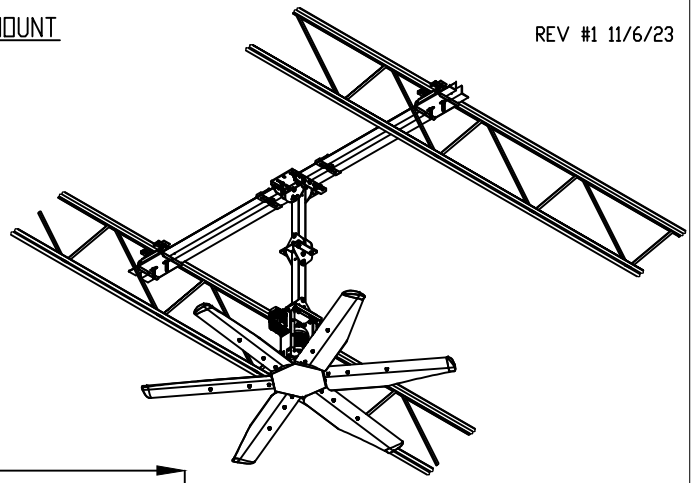

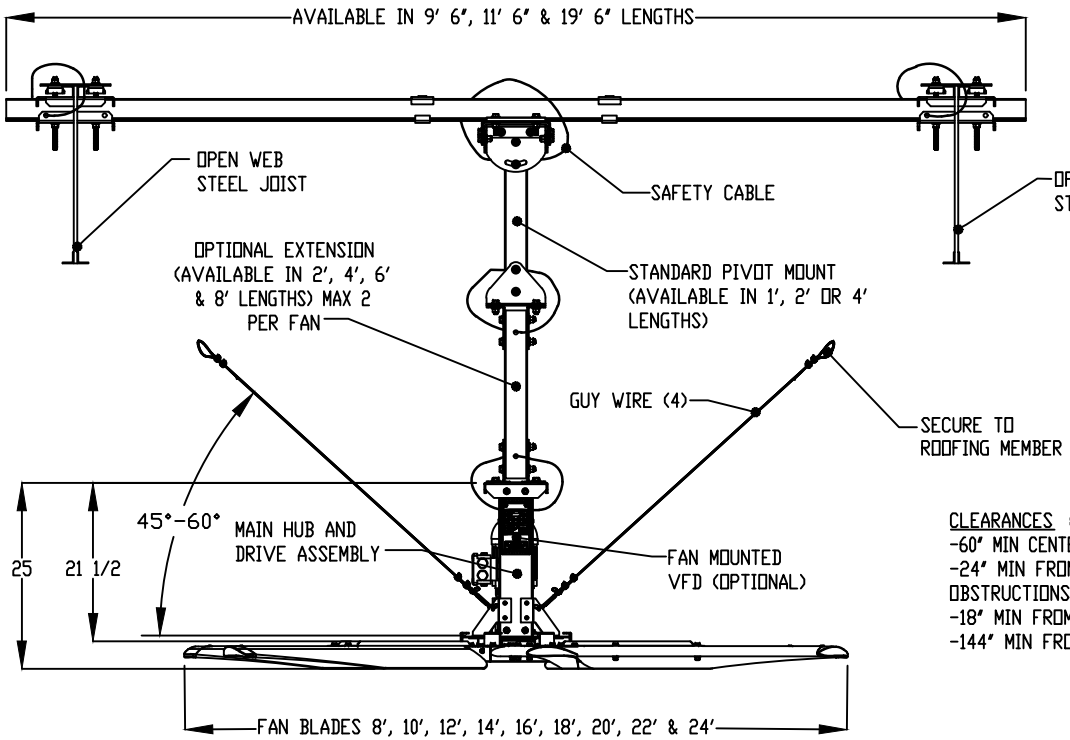

CLEARANCES :

-60" MIN CENTER OF FAN TO ROOF DECK

-24" MIN FROM FAN BLADE'S LEADING EDGE TO OBSTRUCTIONS ABOVE OR BELOW

-18" MIN FROM SIDE OF FAN TO ANY OBSTRUCTION

-144" MIN FROM FLOOR TO FAN LEADING EDGE HEIGHT