MODULAR OUTDOOR DOWN DISCHARGE ELECTRIC HEATER-ROOF TOP PACKAGE WITH COOLING, EVAPORATIVE COOLER INTAKE AND INTAKE HOOD

IHECEHSAHCCDPRTP-MPU
REV.#2 06/15/2015

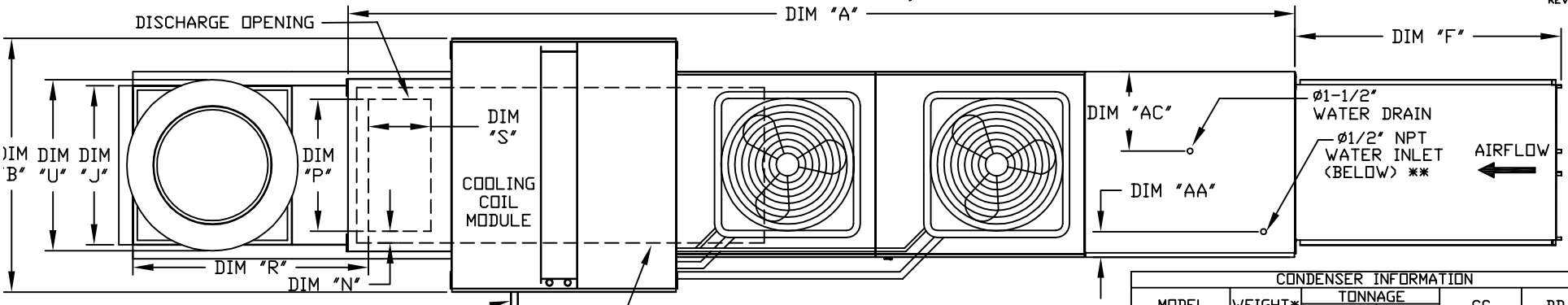

CONDENSER INFORMATION						
MODEL	WEIGHT*	TONNAGE #1	TONNAGE #2	CC	DD	EE
2 TON-G10	119 LBS	2 TON	N/A	26-5/16	56-1/16	52-3/8
3 TON-G10	134 LBS	3 TON	N/A	33-5/16	63-1/16	59-3/8
5 TON-G10	253 LBS	2 TON	3 TON	33-5/16	63-1/16	59-3/8
5 TON-G10	302 LBS	2.5 TON	2.5TON	32-13/16	62-9/16	58-7/8
5 TON-G15	197 LBS	5 TON	N/A	32-13/16	69-9/16	65-7/8
7.5 TON-G15	348 LBS	2.5 TON	5 TON	32-13/16	69-9/16	65-7/8
8 TON-G15	331 LBS	3 TON	5 TON	33-5/16	71-11/16	68
10 TON-G15	394 LBS	5 TON	5 TON	32-13/16	69-9/16	65-7/8
10 TON-G18	394 LBS	5 TON	5 TON	32-13/16	76-3/16	70-7/8
10 TON-920	394 LBS	5 TON	5 TON	32-13/16	97-3/16	91-15/16

R410A REFRIGERAN

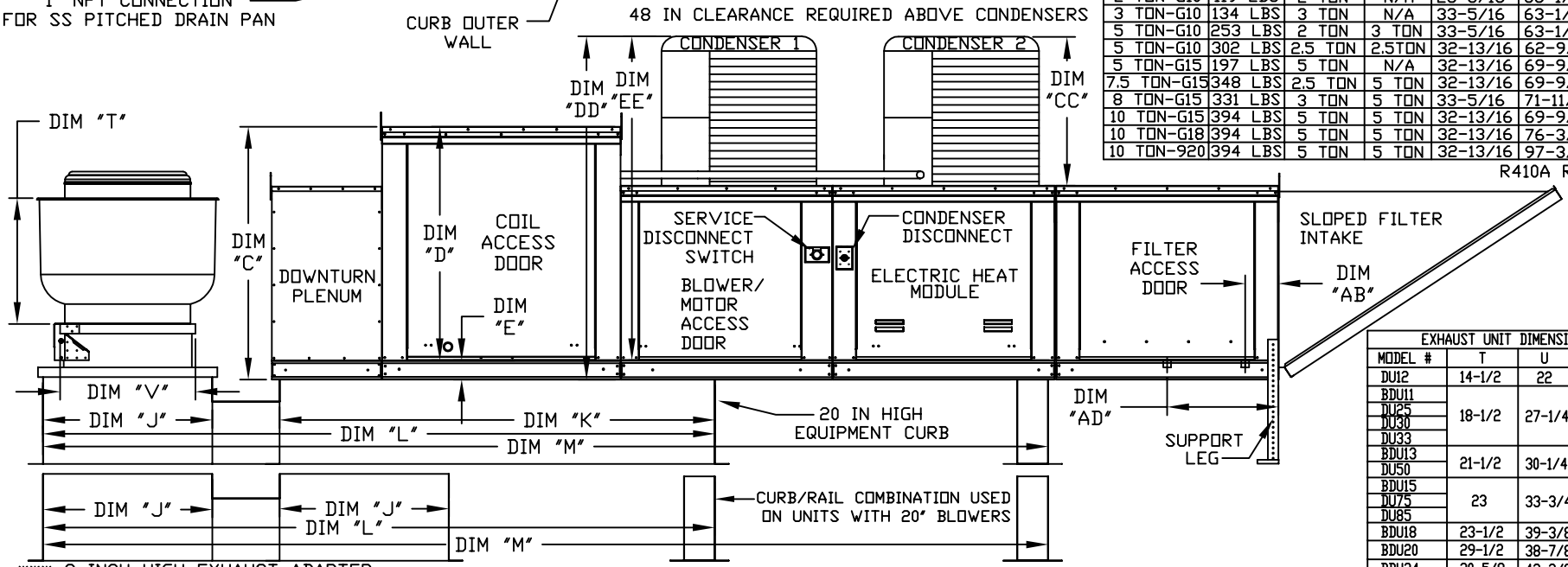

*** 9 INCH HIGH EXHAUST ADAPTER MAY BE REQUIRED

EXHAUST UNIT DIMENSIONS			
MODEL #	T	U	V ***
DU12	14-1/2	22	19
BDU11, DU25, DU30, DU33	18-1/2	27-1/4	21
BDU13, DU50	21-1/2	30-1/4	21
BDU15, DU75, DU85	23	33-3/4	24-3/4
BDU18	23-1/2	39-3/8	28
BDU20	29-1/2	38-7/8	28
BDU24	30-5/8	43-3/8	33
BDU30	33-1/2	52-3/4	40

	UNIT DIMENSIONS						CURB/RAIL				DISCHARGE OPENING				WATER INLET		DRAIN OPENING		INTAKE FILTER SIZE & QTY	MAX. FILTER VELOCITY
MODEL	A	B	C	D	E	F	J	K	L	M	N	P	R	S	AA	AB	AC	AD		
E1-G10	167-1/4	39-3/8	42-3/4	39	3-3/4	44-3/8	21	71	106	166-5/8	3-9/16	13-7/8	36-13/16	11-1/2	4-1/2	6-1/4	13	16	16"x20"x2" (3)	@3600 CFM = 686 FPM
E2-G15	181-1/4	49-3/8	47-3/4	44	3-3/4	53-5/8	31	79	124	190-5/8	4-5/16	22-3/8	46-9/16	18	4-1/2	6-1/4	18	16	20"x25"x2" (3)	@6500 CFM = 754 FPM
E3-G18	192-1/2	54-3/8	56-3/8	51-1/8	5-1/4	51-5/8	35	84	133	199-5/8	6-5/16	22-3/8	49-1/2	18	4-1/2	5-3/4	20	19	16"x20"x2" (6)	@8000 CFM = 762 FPM
E4-920	238-9/16	60-7/16	64-3/8	59-1/8	5-1/4	76-3/8	42	115-3/16	171-3/16	255-13/16	5-1/4	31-1/2	56-13/16	23-1/2	4-1/2	5-3/4	23-1/2	17-1/2	16"x20"x2" (10)	@13000 CFM = 743 FPM

UNIT INFORMATION.

MODEL	TONNAGE RANGE MIN	TONNAGE RANGE MAX
E1-G10	2 Ton	5 Ton
E2-G15	5 Ton	10 Ton
E3-G18	10 Ton	10 Ton
E4-920	10 Ton	10 Ton

STANDARD EVAPORATIVE COOLING UNIT				
TOT. WEIGHT	MEDIA SIZE & QTY	VEL. @ MAX. CFM	NOZZLES	MAX. FLOW RATE
1115 LBS	20"x25"x2" (3)	406 FPM	6	3 GPH
1530 LBS	16"x20"x2" (8)	429 FPM	10	5 GPH
1860 LBS	20"x25"x2" (8)	348 FPM	14	7 GPH
2955 LBS	16"x20"x2" (15)	572 FPM	24	12 GPH

CELDEK EVAPORATIVE COOLING UNIT				
TOT. WEIGHT	MEDIA SIZE & QTY	VEL. @ MAX. CFM	NOZZLES	MAX. FLOW RATE
1120 LBS	20"x24"x12"	1050 FPM	12	3.9 GPH
1525 LBS	25"x32"x12"	1080 FPM	20	6.5 GPH
1850 LBS	30"x36"x12"	1067 FPM	28	8.4 GPH
2925 LBS	38"x43"x12"	1322 FPM	35	10.15 GPH

*ADD CONDENSING UNIT WEIGHT TO WEIGHT IN TABLE ABOVE

** MAX EVAP WATER PRESSURE = 50 PSI @ 70 DEG F

ALL DIMENSIONS ARE NOMINAL AND GIVEN IN INCHES.

MAX. ROOF OPENING 2" SMALLER THAN CURB OUTSIDE DIMENSION