)UTDOOR DOWN DISCHARGE MOD PACKAGE UNIT, HEATING COIL, LPD EVAPORATIVE COOLER INTAKE, INTAKE HOOD AND OPTIONAL MIXING BOX

IHLPDECMBHCCCDAH-MPU
REV.#3 09/13/2016

CONDENSER INFORMATION						
MODEL	WEIGHT*	TONNAGE #1	TONNAGE #2	CC	DD	EE
2 TON-1	119 LBS	2 TON	N/A	26-5/16	56-1/16	52-3/8
3 TON-1	134 LBS	3 TON	N/A	33-5/16	63-1/16	59-3/8
5 TON-1	253 LBS	2 TON	3 TON	33-5/16	63-1/16	59-3/8
5 TON-1	302 LBS	2.5 TON	2.5TON	32-13/16	62-9/16	58-7/8
5 TON-2	197 LBS	5 TON	N/A	32-13/16	69-9/16	65-7/8
7.5 TON-2	348 LBS	2.5 TON	5 TON	32-13/16	69-9/16	65-7/8
8 TON-2	331 LBS	3 TON	5 TON	33-5/16	71-11/16	68
10 TON-2	394 LBS	5 TON	5 TON	32-13/16	69-9/16	65-7/8
10 TON-3	394 LBS	5 TON	5 TON	32-13/16	76-3/16	70-7/8
10 TON-4	394 LBS	5 TON	5 TON	32-13/16	97-3/16	91-15/16

R410A REFRIGERANT

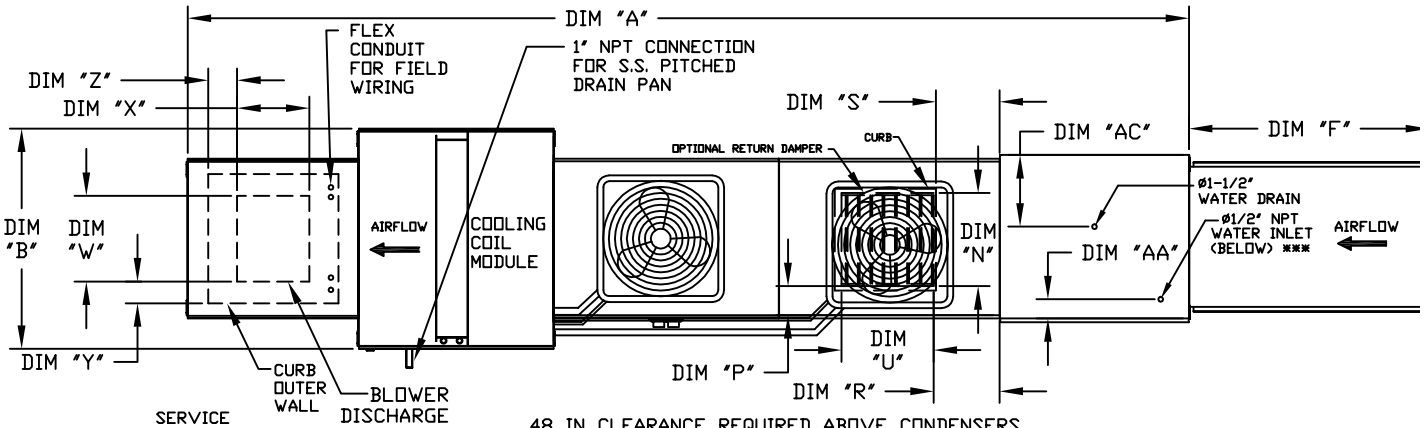

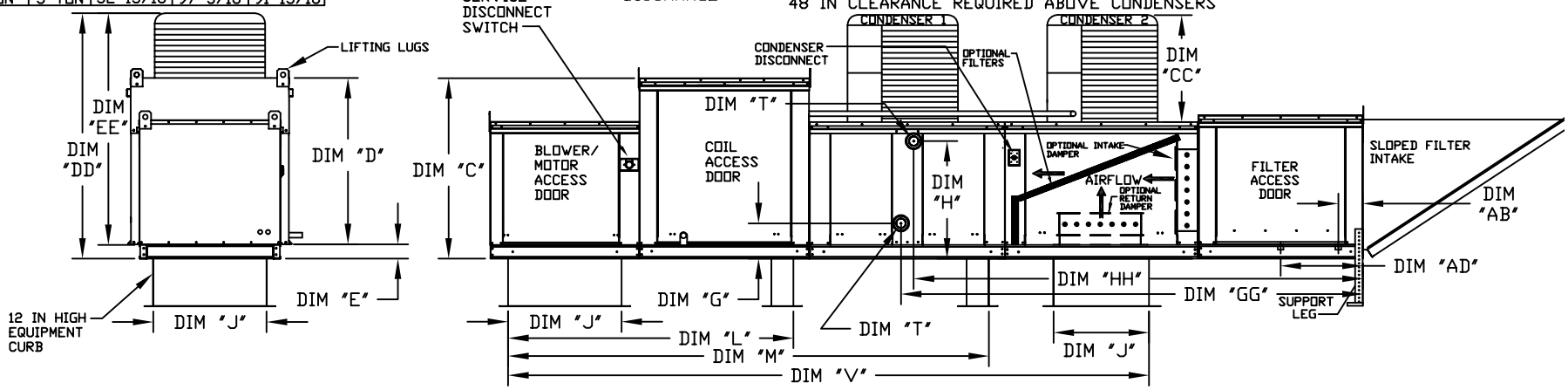

ALL DIMENSIONS ARE NOMINAL AND GIVEN IN INCHES.

MAX. ROOF OPENING 2" SMALLER THAN CURB OUTSIDE DIMENSION

UNIT DIMENSIONS																DISCHARGE OPENING				WATER INLET	DRAIN OPENING		
UNIT SIZE	A	B	C	D	E	F	J	L	M	N	P	R	S	U	V	W	X	Y	Z	AA	AB	AC	AD
1	191-1/8	39-3/8	42-3/4	39	3-3/4	53-5/8	21	65-13/16	107-15/16	14	8	14	12-1/2	18	140-7/8	13-1/4	11-1/2	3-7/8	1-3/4	4-1/2	6-1/4	18	16
2**	205-1/8	49-3/8	47-3/4	44	3-3/4	51-5/8	31	74-5/8	116-3/4	22-3/4	8	11	7-1/2	24	154-7/8	15-3/4	13-9/16	7-5/8	7-15/16	4-1/2	5-3/4	20	19
2	205-1/8	49-3/8	47-3/4	44	3-3/4	51-5/8	31	74-5/8	116-3/4	22-3/4	8	11	7-1/2	24	154-7/8	18-3/4	16	6-1/8	5-1/2	4-1/2	5-3/4	20	19
3	207-1/4	54-3/8	56-3/8	51-1/8	5-1/4	76-3/8	35	79-3/16	121-5/16	28	8	7	4-1/2	30	162-3/8	22	19	6-1/2	7	4-1/2	5-3/4	23-1/2	17-1/2
4	262-1/2	60-7/16	64-3/8	59-1/8	5-1/4	71-3/8	42	104-9/32	158-15/32	33	10	11	8	36	208	24-7/8	24-7/8	8-9/16	1-1/8	4-1/2	5-3/4	28-7/8	17-1/2

HOT WATER MODULE

UNIT SIZE	TOTAL CAPACITY (MBH)	PIPE CONNECTION "T" (MPT)	G	GG	H	HH
1	165.63	2	8-1/4	96-15/16	24-3/4	94-3/16
2**	320.88	2	8-1/4	102-15/16	28-3/4	100-3/16
2	320.88	2	8-1/4	102-15/16	28-3/4	100-3/16
3	514.97	1-1/2	9-1/2	99-13/16	38	97-9/16
4	831.87	2-1/2	10	118-1/4	45-1/2	114-5/8

STEAM COIL MODULE

UNIT SIZE	TOTAL CAPACITY (MBH)	PIPE CONNECTION "T" (MPT)	STEAM PSI	G	GG	H	HH
1	176.49	2-1/2	5	8-3/4	95-9/16	16-15/16	95-9/16
2**	328.19	2-1/2	5	8-3/4	101-9/16	18-3/8	101-9/16
2	328.19	2-1/2	5	8-3/4	101-9/16	18-3/8	101-9/16
3	505.64	2-1/2	5	10-1/4	98-11/16	23-5/8	98-11/16
4	812.24	2-1/2	5	10-1/4	116-13/16	28-5/8	116-13/16

TONNAGE RANGE	
MIN	MAX
2 Ton	5 Ton
5 Ton	10 Ton
5 Ton	10 Ton
10 Ton	10 Ton
10 Ton	10 Ton

INTAKE FILTERS	
UNIT SIZE	FILTER SIZE & QTY
1	20"x25"x2" (3)
2**	16"x20"x2" (6)
2	16"x20"x2" (6)
3	16"x20"x2" (10)
4	20"x25"x2" (8)

CELDEK EVAPORATIVE COOLING UNIT W/							
	UNIT SIZE	TOT. WEIGHT		TOT. WEIGHT	MEDIA SIZE & QTY	NOZZLES	MAX. FLOW RATE
HOT WATER COIL MODULE	1	1115 LBS	STEAM COIL MODULE	1115 LBS	25"x32"x12"	20	6.5 GPH
	2**	1535 LBS		1535 LBS	30"x36"x12"	28	8.4 GPH
	2	1545 LBS		1545 LBS	30"x36"x12"	28	8.4 GPH
	3	1990 LBS		1985 LBS	38"x43"x12"	35	10.15 GPH
	4	3015 LBS		2990 LBS	45"x54"x12"	42	12.6 GPH

OPTIONAL MIXING BOX FILTERS
FILTER SIZE & QTY
10"x16"x2" (5)
20"x25"x2" (2), 16"x25"x2" (1)
20"x25"x2" (2), 16"x25"x2" (1)
15"x20"x2" (4), 15"x15"x2" (2)
18"x25"x2" (4), 16"x20"x2" (2)

*ADD CONDENSING UNIT WEIGHT TO WEIGHT IN TABLES ABOVE
** DIMENSIONS APPLY TO UNITS WITH G12 BLOWERS ONLY
*** MAX. EVAP. WATER PRESSURE = 50 PSI @ 70 DEG. F