)UTDOOR SIDE DISCHARGE MOD PACKAGE UNIT, HEATING COIL, LPD EVAPORATIVE COOLER INTAKE, INTAKE HOOD AND OPTIONAL MIXING BOX

IHLPDECMBHCCCSAH-MPU
REV.#3 09/13/2016

CONDENSER INFORMATION						
MODEL	WEIGHT*	TONNAGE #1	TONNAGE #2	CC	DD	EE
2 TON-1	119 LBS	2 TON	N/A	26-5/16	56-1/16	52-3/8
3 TON-1	134 LBS	3 TON	N/A	33-5/16	63-1/16	59-3/8
5 TON-1	253 LBS	2 TON	3 TON	33-5/16	63-1/16	59-3/8
5 TON-1	302 LBS	2.5 TON	2.5TON	32-13/16	62-9/16	58-7/8
5 TON-2	197 LBS	5 TON	N/A	32-13/16	69-9/16	65-7/8
7.5 TON-2	348 LBS	2.5 TON	5 TON	32-13/16	69-9/16	65-7/8
8 TON-2	331 LBS	3 TON	5 TON	33-5/16	71-11/16	68
10 TON-2	394 LBS	5 TON	5 TON	32-13/16	69-9/16	65-7/8
10 TON-3	394 LBS	5 TON	5 TON	32-13/16	76-3/16	70-7/8
10 TON-4	394 LBS	5 TON	5 TON	32-13/16	97-3/16	91-15/16

R410A REFRIGERANT

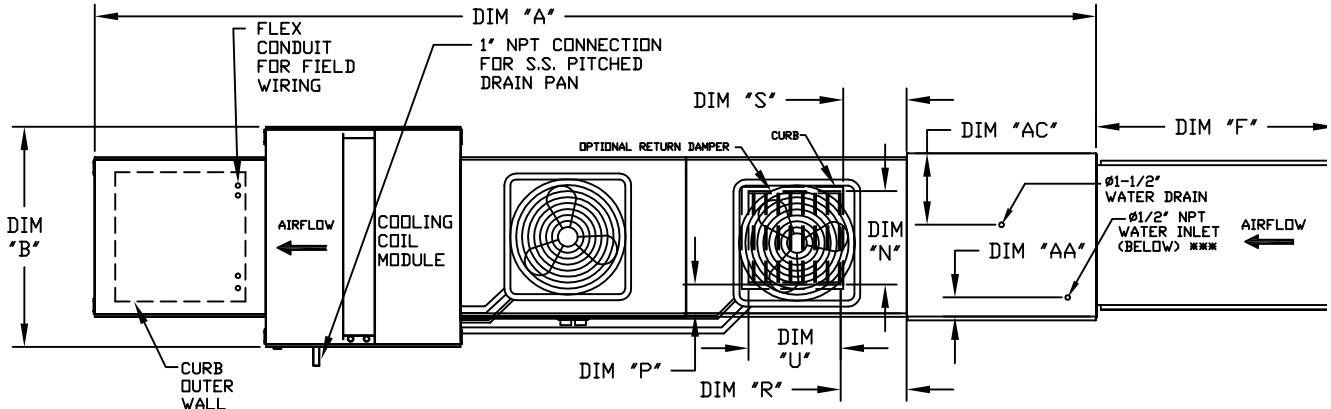

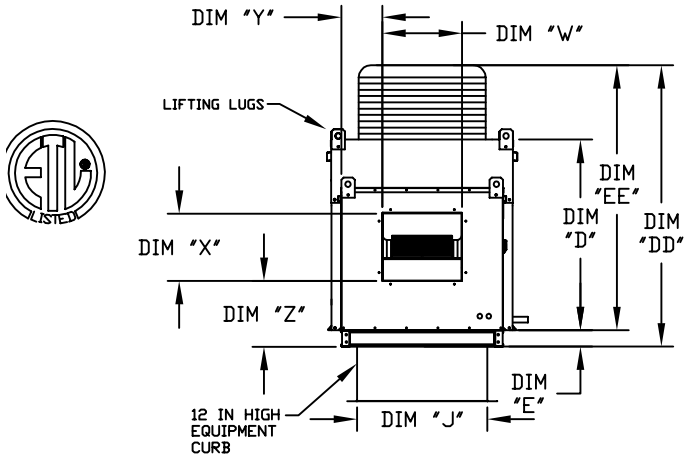

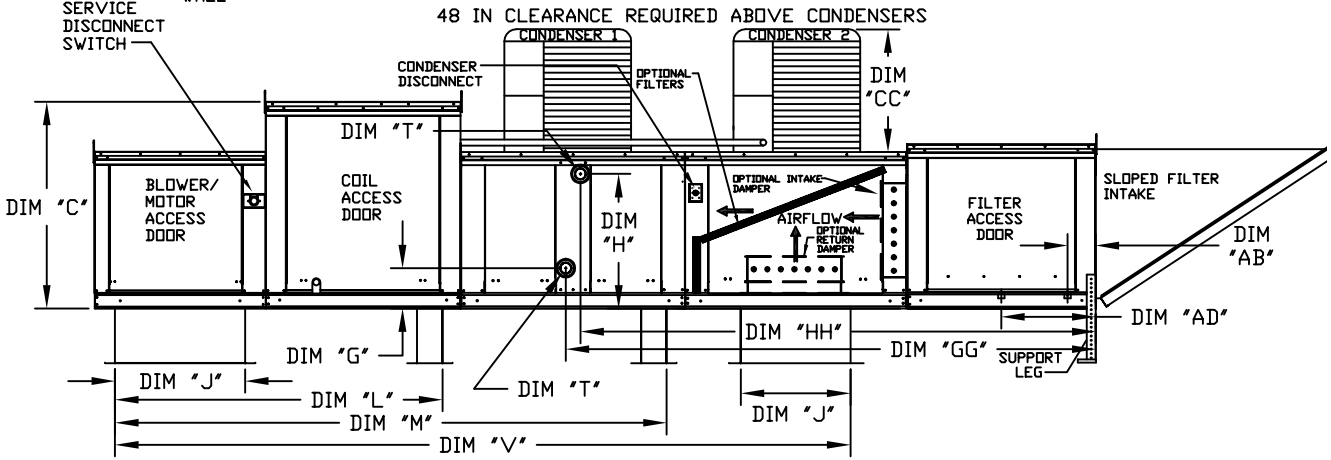

ALL DIMENSIONS ARE NOMINAL AND GIVEN IN INCHES.

MAX. ROOF OPENING 2" SMALLER THAN CURB OUTSIDE DIMENSION

UNIT DIMENSIONS																BELT DRIVE DISCHARGE OPENING				DIRECT DRIVE DISCHARGE OPENING				WATER INLET		DRAIN OPENING	
UNIT SIZE	A	B	C	D	E	F	J	L	M	N	P	R	S	U	V	W	X	Y	Z	W	X	Y	Z	AA	AB	AC	AD
1	191-1/8	39-3/8	42-3/4	39	3-3/4	53-5/8	21	65-13/16	107-15/16	14	8	14	12-1/2	18	140-7/8	13-1/4	11-1/2	6-3/8	11-7/8	17-1/4	15-1/2	4-3/8	8-16/16	4-1/2	6-1/4	18	16
2**	205-1/8	49-3/8	47-3/4	44	3-3/4	51-5/8	31	74-5/8	116-3/4	22-3/4	8	11	7-1/2	24	154-7/8	15-3/4	13-9/16	10-1/8	13-1/16	N/A	N/A	N/A	N/A	4-1/2	5-3/4	20	19
2	205-1/8	49-3/8	47-3/4	44	3-3/4	51-5/8	31	74-5/8	116-3/4	22-3/4	8	11	7-1/2	24	154-7/8	18-3/4	16	8-5/8	14-1/16	24-3/4	22	5-5/8	10-15/16	4-1/2	5-3/4	20	19
3	207-1/4	54-3/8	56-3/8	51-1/8	5-1/4	76-3/8	35	79-3/16	121-5/16	28	8	7	4-1/2	30	162-3/8	22	19	9	17-7/8	28	25	6-1/16	14-15/16	4-1/2	5-3/4	23-1/2	17-1/2
4	262-1/2	60-7/16	64-3/8	59-1/8	5-1/4	71-3/8	42	104-9/32	158-15/32	33	10	11	8	36	208	24-7/8	24-7/8	11-1/16	19-1/8	30	30	8-9/16	16-5/8	4-1/2	5-3/4	28-7/8	17-1/2

HOT WATER MODULE

UNIT SIZE	TOTAL CAPACITY (MBH)	PIPE CONNECTION "T" (MPT)	G	GG	H	HH
1	165.63	2	8-1/4	96-15/16	24-3/4	94-3/16
2**	320.88	2	8-1/4	102-15/16	28-3/4	100-3/16
2	320.88	2	8-1/4	102-15/16	28-3/4	100-3/16
3	514.97	1-1/2	9-1/2	99-13/16	38	97-9/16
4	831.87	2-1/2	10	118-1/4	45-1/2	114-5/8

STEAM COIL MODULE

UNIT SIZE	TOTAL CAPACITY (MBH)	PIPE CONNECTION "T" (MPT)	STEAM PSI	G	GG	H	HH
1	176.49	2-1/2	5	8-3/4	95-9/16	16-15/16	95-9/16
2**	328.19	2-1/2	5	8-3/4	101-9/16	18-3/8	101-9/16
2	328.19	2-1/2	5	8-3/4	101-9/16	18-3/8	101-9/16
3	505.64	2-1/2	5	10-1/4	98-11/16	23-5/8	98-11/16
4	812.24	2-1/2	5	10-1/4	116-13/16	28-5/8	116-13/16

TONNAGE RANGE	
MIN	MAX
2 Ton	5 Ton
5 Ton	10 Ton
5 Ton	10 Ton
10 Ton	10 Ton
10 Ton	10 Ton

INTAKE FILTERS	
UNIT SIZE	FILTER SIZE & QTY
1	20"x25"x2" (3)
2**	16"x20"x2" (6)
2	16"x20"x2" (6)
3	16"x20"x2" (10)
4	20"x25"x2" (8)

CELDEK EVAPORATIVE COOLING UNIT W/							
	UNIT SIZE	TOT. WEIGHT		TOT. WEIGHT	MEDIA SIZE & QTY	NOZZLES	MAX. FLOW RATE
HOT WATER COIL MODULE	1	1115 LBS	STEAM COIL MODULE	1115 LBS	25"x32"x12"	20	6.5 GPH
	2**	1535 LBS		1535 LBS	30"x36"x12"	28	8.4 GPH
	2	1545 LBS		1545 LBS	30"x36"x12"	28	8.4 GPH
	3	1990 LBS		1985 LBS	38"x43"x12"	35	10.15 GPH
	4	3015 LBS		2990 LBS	45"x54"x12"	42	12.6 GPH

OPTIONAL MIXING BOX FILTERS
FILTER SIZE & QTY
10"x16"x2" (5)
20"x25"x2" (2), 16"x"25"x2" (1)
20"x25"x2" (2), 16"x"25"x2" (1)
15"x20"x2" (4), 15"x15"x2" (2)
18"x25"x2" (4), 16"x20"x2" (2)

*ADD CONDENSING UNIT WEIGHT TO WEIGHT IN TABLES ABOVE
** DIMENSIONS APPLY TO UNITS WITH G12 BLOWERS ONLY
*** MAX. EVAP. WATER PRESSURE = 50 PSI @ 70 DEG. F