OUTDOOR SIDE DISCHARGE MOD PACKAGE UNIT, HEATING COIL, INTAKE HOOD AND OPTIONAL MIXING BOX

IHMBHCCCSAH-MPU
REV.#7 06/15/2015

CONDENSER INFORMATION						
MODEL	WEIGHT*	TONNAGE #1	TONNAGE #2	CC	DD	EE
2 TON-G10	119 LBS	2 TON	N/A	26-5/16	56-1/16	52-3/8
3 TON-G10	134 LBS	3 TON	N/A	33-5/16	63-1/16	59-3/8
5 TON-G10	253 LBS	2 TON	3 TON	33-5/16	63-1/16	59-3/8
5 TON-G10	302 LBS	2.5 TON	2.5 TON	32-13/16	62-9/16	58-7/8
5 TON-G12	197 LBS	5 TON	N/A	32-13/16	69-9/16	65-7/8
7.5 TON-G12	348 LBS	2.5 TON	5 TON	32-13/16	69-9/16	65-7/8
10 TON-G12	394 LBS	5 TON	5 TON	32-13/16	69-9/16	65-7/8
5 TON-G15	197 LBS	5 TON	N/A	32-13/16	69-9/16	65-7/8
7.5 TON-G15	302 LBS	2.5 TON	5 TON	32-13/16	69-9/16	65-7/8
8 TON-G15	331 LBS	3 TON	5 TON	33-5/16	71-11/16	68
10 TON-G15	394 LBS	5 TON	5 TON	32-13/16	69-9/16	65-7/8
10 TON-G18	394 LBS	5 TON	5 TON	32-13/16	76-3/16	70-7/8
10 TON-920	394 LBS	5 TON	5 TON	32-13/16	97-3/16	91-15/16

R410A REFRIGERANT

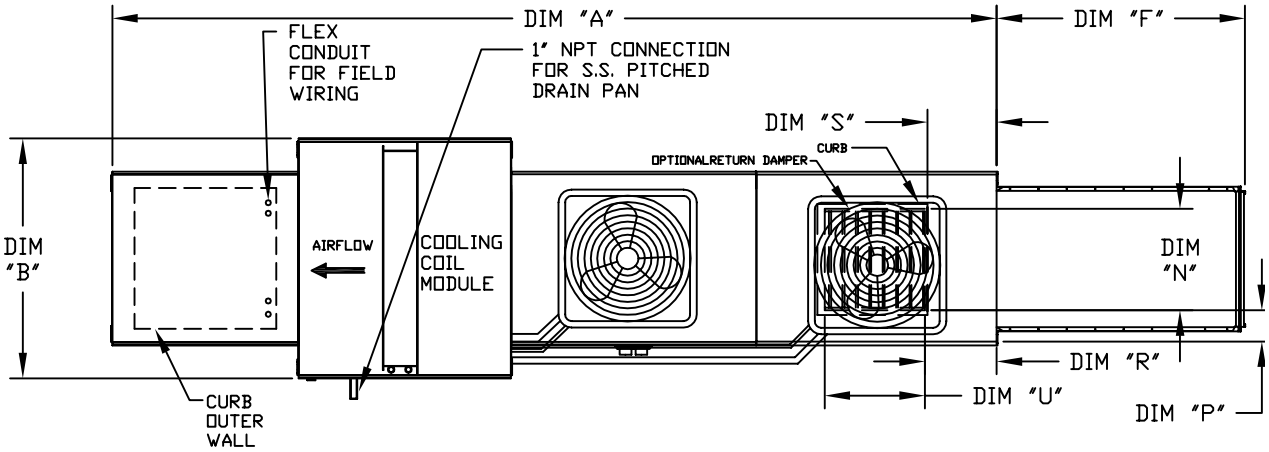

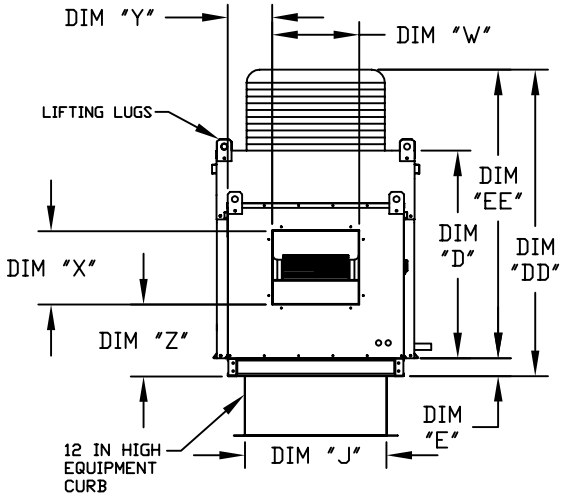

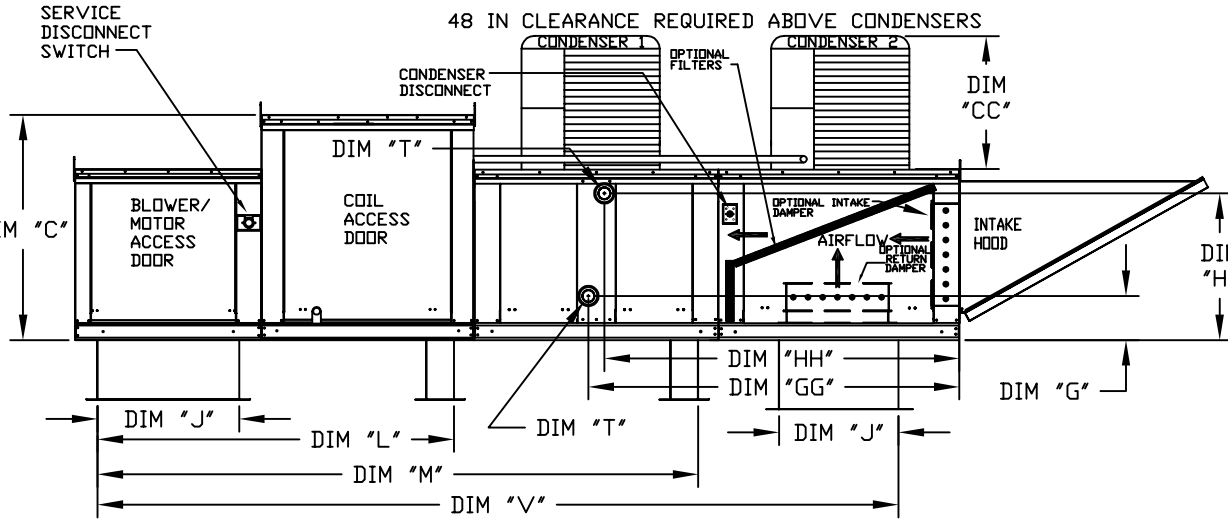

ALL DIMENSIONS ARE NOMINAL AND GIVEN IN INCHES.

UNIT DIMENSIONS																DISCHARGE OPENING				TONNAGE RANGE		UNIT INFORMATION	
MODEL	A	B	C	D	E	F	J	L	M	N	P	R	S	U	V	W	X	Y	Z	MIN	MAX	FILTER SIZE & QTY	MAX. FILTER VELOCITY
G10	158-7/8	39-3/8	42-3/4	39	3-3/4	44-3/8	21	65-13/16	107-15/16	14	8	14	12-1/2	18	140-7/8	13-1/4	11-1/2	6-3/8	11-7/8	2 Ton	5 Ton	16"x20"x2" (3)	@3500 CFM = 667 FPM
G12	166-7/8	49-3/8	47-3/4	44	3-3/4	53-5/8	31	74-5/8	116-3/4	22-3/4	8	11	7-1/2	24	154-7/8	15-3/4	13-9/16	10-1/8	13-1/16	5 Ton	10 Ton	20"x25"x2" (3)	@5000 CFM = 580 FPM
G15	166-7/8	49-3/8	47-3/4	44	3-3/4	53-5/8	31	74-5/8	116-3/4	22-3/4	8	11	7-1/2	24	154-7/8	18-3/4	16	8-5/8	14-1/16	5 Ton	10 Ton	20"x25"x2" (3)	@6000 CFM = 696 FPM
G18	171-7/8	54-3/8	56-3/8	51-1/8	5-1/4	51-5/8	35	79-3/16	121-5/16	28	8	7	4-1/2	30	162-3/8	22	19	9	17-7/8	10 Ton	10 Ton	16"x20"x2" (6)	@8000 CFM = 762 FPM
920	227-1/8	60-7/16	64-3/8	59-1/8	5-1/4	76-3/8	42	106-3/16	169-1/2	33	10	11	8	36	208	24-7/8	24-7/8	11-1/16	19-1/8	10 Ton	10 Ton	16"x20"x2" (10)	@15000 CFM = 857 FPM

HOT WATER COIL MODULE

MODEL	WEIGHT*	TOTAL CAPACITY (MBH)	PIPE CONNECTION "T" (MPT)	G	GG	H	HH
G10	920 LBS	165.63	2	8-1/4	64-11/16	24-3/4	61-15/16
G12	1280 LBS	320.88	2	8-1/4	64-11/16	28-3/4	61-15/16
G15	1290 LBS	320.88	2	8-1/4	64-11/16	28-3/4	61-15/16
G18	1570 LBS	514.97	1-1/2	9-1/2	64-7/16	38	62-3/16
920	2635 LBS	831.87	2-1/2	10	82-7/8	45-1/2	79-7/8

MAX. DOOR OPENING 2" SMALLER THAN CURB OUTSIDE DIMENSION

STEAM COIL MODULE

MODEL	WEIGHT*	TOTAL CAPACITY (MBH)	PIPE CONNECTION "T" (MPT)	STEAM PSI	G	GG	H	HH
G10	920 LBS	176.49	2-1/2	5	8-3/4	63-5/16	16-15/16	63-5/16
G12	1280 LBS	328.19	2-1/2	5	8-3/4	63-5/16	18-3/8	63-5/16
G15	1290 LBS	328.19	2-1/2	5	8-3/4	63-5/16	18-3/8	63-5/16
G18	1565 LBS	505.64	2-1/2	5	10-1/4	63-5/16	23-5/8	63-5/16
920	2600 LBS	812.24	2-1/2	5	10-1/4	81-13/32	28-5/8	81-13/32

*ADD CONDENSING UNIT WEIGHT TO WEIGHT IN TABLE ABOVE

OPTIONAL MIXING BOX FILTERS
FILTER SIZE & QTY
10"x16"x2" (5)
20"x25"x2" (2), 16"x25"x2" (1)
20"x25"x2" (2), 16"x25"x2" (1)
15"x20"x2" (4), 15"x15"x2" (2)
18"x25"x2" (4), 16"x20"x2" (2)