OUTDOOR DOWN DISCHARGE MOD PACKAGE UNIT-ROOFTOP PACKAGE, HEATING COIL, V-BANK, LPD EVAPORATIVE COOLER INTAKE, INTAKE HOOD AND OPTIONAL MIXING BOX

IHTLVBLPDECMBHCCCDAHRTP-MPU-15
REV.#2 06/15/2015

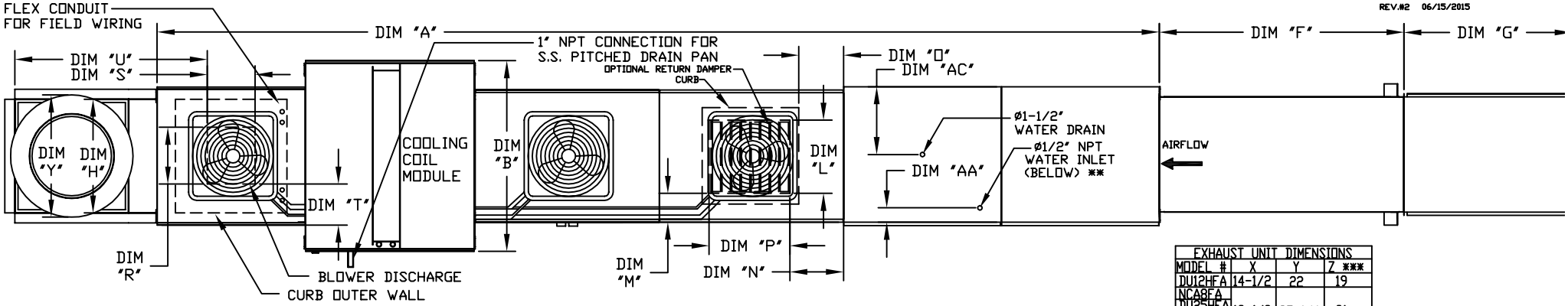

EXHAUST UNIT DIMENSIONS			
MODEL #	X	Y	Z ***
DU12HFA	14-1/2	22	19
NCA8FA DU25HFA DU30HFA DU33HFA	18-1/2	27-1/4	21
NCA10FA DU50HFA	21-1/2	30-1/4	21
NCA14FA DU75HFA DU85HFA	23	33-3/4	24-3/4
NCA16FA	23-1/2	39-3/8	28
NCA18FA	29-1/2	38-7/8	28
NCA24FA	30-5/8	43-3/8	33
NCA30FA	33-1/2	52-3/4	40

*** 9 IN. HIGH EXHAUST ADAPTER MAY BE REQUIRED

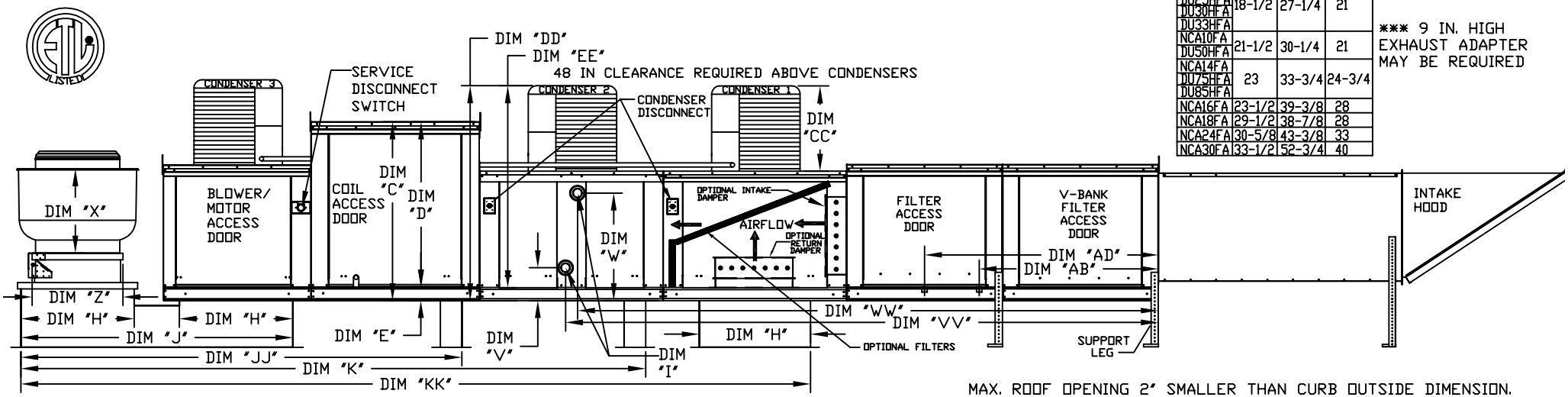

MAX. ROOF OPENING 2" SMALLER THAN CURB OUTSIDE DIMENSION.

ALL DIMENSIONS ARE NOMINAL AND GIVEN IN INCHES.

UNIT DIMENSIONS													RETURN OPENING					DISCHARGE OPENING				TONNAGE RANGE		WATER INLET		DRAIN OPENING	
MODEL	A	B	C	D	E	F	G	H	J	JJ	K	KK	L	M	N	O	P	R	S	T	U	MIN	MAX	AA	AB	AC	AD
G18	242-5/8	54-3/8	56-3/8	51-1/8	5-1/4	50	76-3/8	35	84	128-3/16	170-8/16	211-3/8	28	8	7	4-1/2	30	22	19	6-1/2	56	15 Ton	15 Ton	4-1/2	41-1/8	23-1/2	52-7/8

HOT WATER COIL MODULE

MODEL	TOTAL CAPACITY (MBH)	PIPE CONNECTION "I" (MPT)	V	VV	W	WW
G18	514.97	1-1/2	9-1/2	135-3/16	38	132-5/16

STEAM COIL MODULE

MODEL	TOTAL CAPACITY (MBH)	PIPE CONNECTION "I" (MPT)	STEAM PSI	V	VV	W	WW
G18	505.64	2-1/2	5	10-1/4	134-1/16	23-5/8	134-1/16

V-BANK FILTER

MODEL	FILTER SIZE & QTY
G18	16"x20"x2" (15)

CELDEK EVAPORATIVE COOLING UNIT W/

HOT WATER COIL MODULE	MODEL	TOT. WEIGHT	STEAM COIL MODULE	TOT. WEIGHT	MEDIA SIZE & QTY	VEL. @ MAX. CFM	NOZZLES	MAX. FLOW RATE
	G18	2535 LBS		2530 LBS	30"x36"x12"	1067 FPM	28	8.4 GPH

OPTIONAL MIXING BOX FILTERS
FILTER SIZE & QTY
15"x20"x2" (4), 15"x15"x2" (2)

CONDENSER INFORMATION

MODEL	WEIGHT*	TONNAGE #1	TONNAGE #2	TONNAGE #3	CC	DD	EE
15 TON-G18	591 LBS	5 TON	5 TON	5 TON	32-13/16	76-3/16	70-7/8
15 TON-920	591 LBS	5 TON	5 TON	5 TON	32-13/16	97-3/16	91-15/16

R410A REFRIGERANT