MODULAR OUTDOOR IBT HEATER WITH MIXING BOX, COOLING COIL, V-BANK AND INTAKE HOOD

IHVBMBCCSAHIBT-MPU-15
REV.#3 06/15/2015

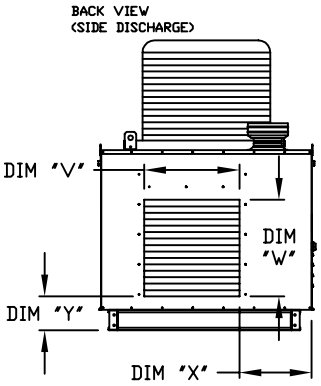

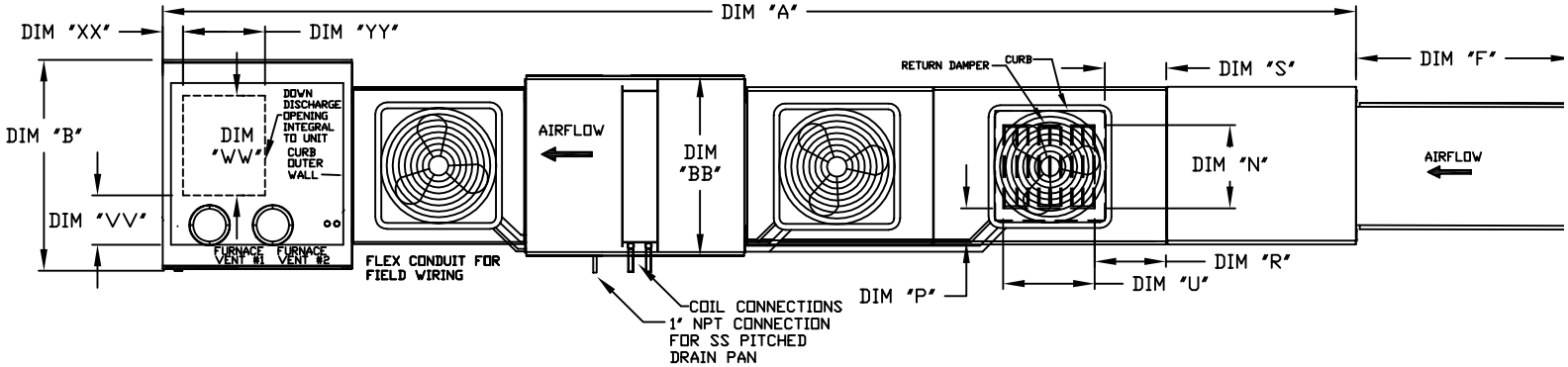

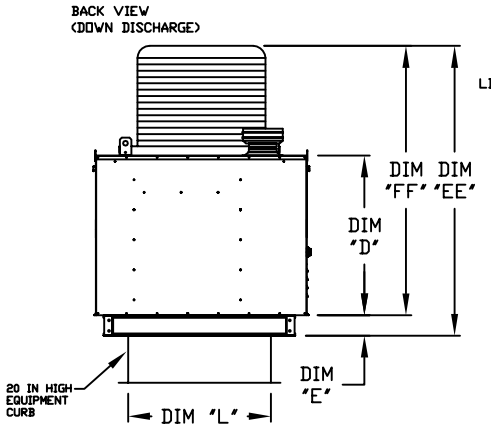

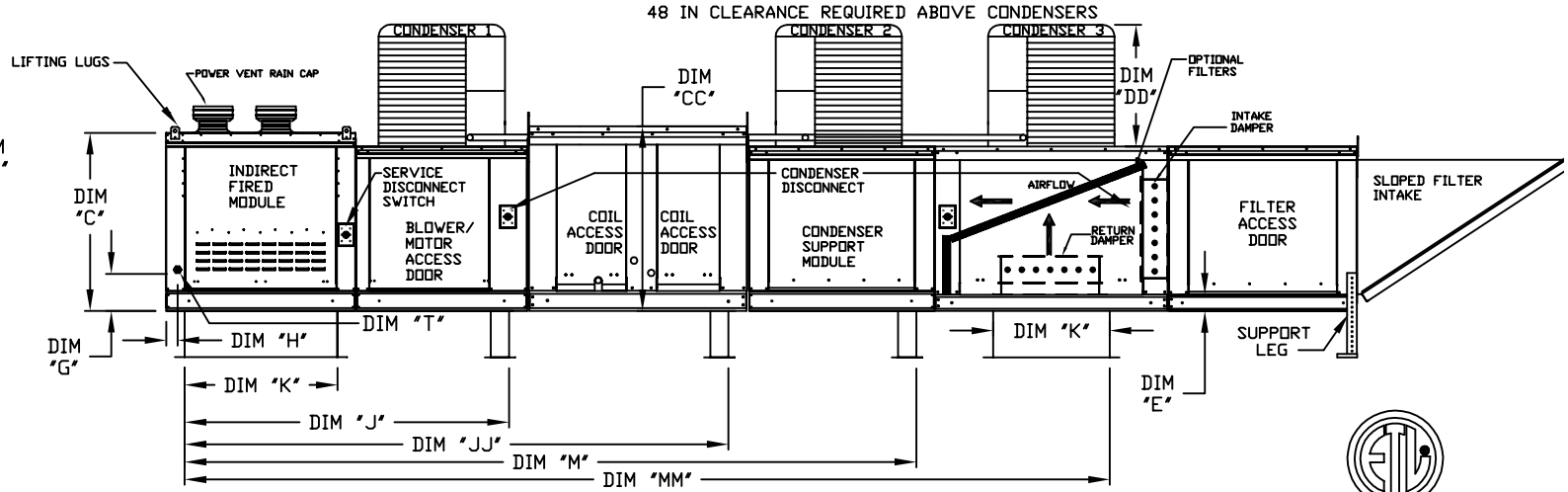

MAX. ROOF OPENING 2" SMALLER THAN CURB OUTSIDE DIMENSION

ALL DIMENSIONS ARE NOMINAL AND GIVEN IN INCHES.

MODEL	WEIGHT (LBS.)	UNIT DIMENSIONS																MIXING BOX OPENING					SIDE DISCHARGE OPENING				DOWN DISCHARGE OPENING				GAS CONNECTION "T" (NPT)	# OF FURNACES
		A	B	BB	C	CC	D	E	F	G	H	J	K	L	JJ	M	MM	N	P	R	S	U	V	W	X	Y	VV	WW	XX	YY		
3-IBT.400-G18	2502	270-1/4	57-3/4	54-3/8	57-1/16	56-3/8	51-13/16	5-1/4	51-5/8	10-3/4	2-11/16	102-3/16	84	35	144-7/16	186-11/16	225-13/16	28	8	7	4-1/2	30	27-1/2	31	18-1/2	8-3/4	6-3/4	26-1/2	4-1/8	26-1/2	1	1
3-IBT.600-300-300-G18	2620	270-1/4	57-3/4	54-3/8	57-1/16	56-3/8	51-13/16	5-1/4	51-5/8	10-3/4	2-11/16	102-3/16	84	35	144-7/16	186-11/16	225-13/16	28	8	7	4-1/2	30	27-1/2	31	18-1/2	8-3/4	6-3/4	26-1/2	4-1/8	26-1/2	1	2
3-IBT.800-400-400-G18	2758	270-1/4	57-3/4	54-3/8	57-1/16	56-3/8	51-13/16	5-1/4	51-5/8	10-3/4	2-11/16	102-3/16	84	35	144-7/16	186-11/16	225-13/16	28	8	7	4-1/2	30	27-1/2	31	18-1/2	8-3/4	6-3/4	26-1/2	4-1/8	26-1/2	1	2
4-IBT.400-920	3397	322-5/8	57-3/4	60-7/16	57-1/16	64-3/8	51-13/16	5-1/4	76-3/8	10-3/4	2-11/16	121-1/4	42	42	175-9/16	229-7/8	277-9/16	33	10	11	8	36	28-1/2	34	18-1/2	8-3/4	8-1/2	26-1/2	4-1/8	26-1/2	1	1
4-IBT.800-400-400-920	3614	322-5/8	57-3/4	60-7/16	57-1/16	64-3/8	51-13/16	5-1/4	76-3/8	10-3/4	2-11/16	121-1/4	42	42	175-9/16	229-7/8	277-9/16	33	10	11	8	36	28-1/2	34	18-1/2	8-3/4	8-1/2	26-1/2	4-1/8	26-1/2	1	2

UNIT INFORMATION

MODEL	BTU RANGE (MBH)**			TURNDOWN RATIO	COMBUSTION EFFICIENCY***	GAS PRESSURE****	
	BURNER INPUT	BTU LOW	BTU HIGH			MIN	MAX
3-IBT.400-G18	400	53.3	320	6	80.0%	7" WC	14" WC
3-IBT.600-300-300-G18	600	40	480	12	80.0%	7" WC	14" WC
3-IBT.800-400-400-G18	800	53.3	640	12	80.0%	7" WC	14" WC
4-IBT.400-920	400	53.3	320	6	80.0%	7" WC	14" WC
4-IBT.800-400-400-920	800	53.3	640	12	80.0%	7" WC	14" WC

CONDENSER INFORMATION							
MODEL	WEIGHT*	TONNAGE			CC	DD	EE
		#1	#2	#3			
15 TON-G18	591 LBS	5 TON	5 TON	5 TON	32-13/16	76-3/16	70-7/8
15 TON-920	591 LBS	5 TON	5 TON	5 TON	32-13/16	97-3/16	91-15/16

:410A REFRIGERANT

	OPTIONAL MIXING BOX FILTERS
MODEL	FILTER SIZE & QTY
G18	15"x20"x2" (4), 15"x15"x2" (2)
920	18"x25"x2" (4), 16"x20"x2" (2)

* ADD CONDENSING UNIT WEIGHT TO WEIGHT IN TABLE ABOVE

** ALL MODELS ARE FULLY ELECTRONICALLY MODULATING

*** COMBUSTION EFFICIENCY OF EVERY UNIT IS 80.0% OVER THE ENTIRE GAS FIRING RANGE.

**** GAS PRESSURES IN TABLE ARE FOR NATURAL GAS, LP MINIMUM GAS INLET PRESSURE = 11" W.C.