IHVBECHBCCSAHIBTRTP-MPU
REV.#3 06/15/2015

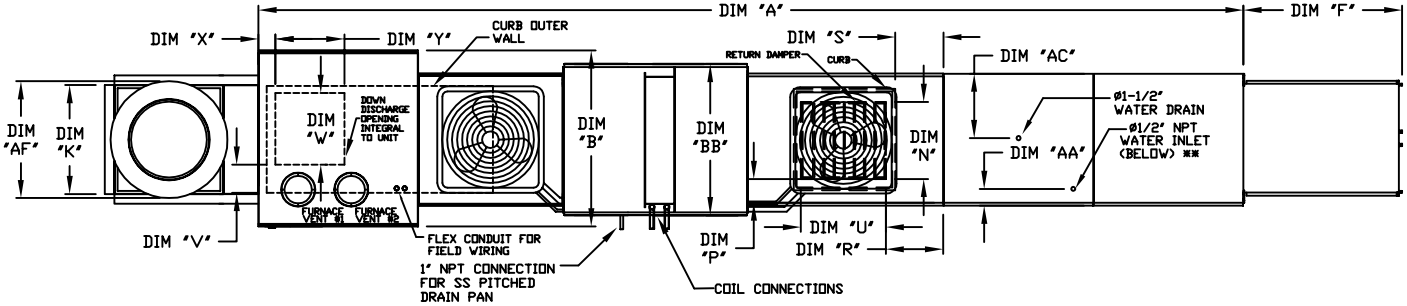

EXHAUST UNIT DIMENSIONS			
MODEL #	AE	AF	AG ******
DU12HFA	14-1/2	22	19
NCA8FA DU25HFA DU30HFA DU33HFA	18-1/2	27-1/4	21
NCA10FA DU50HFA	21-1/2	30-1/4	21
NCA14FA DU75HFA DU85HFA	23	33-3/4	24-3/4
NCA16FA	23-1/2	39-3/8	28
NCA18FA	29-1/2	38-7/8	28
NCA24FA	38-5/8	43-3/8	33
NCA30FA	33-1/2	52-3/4	40

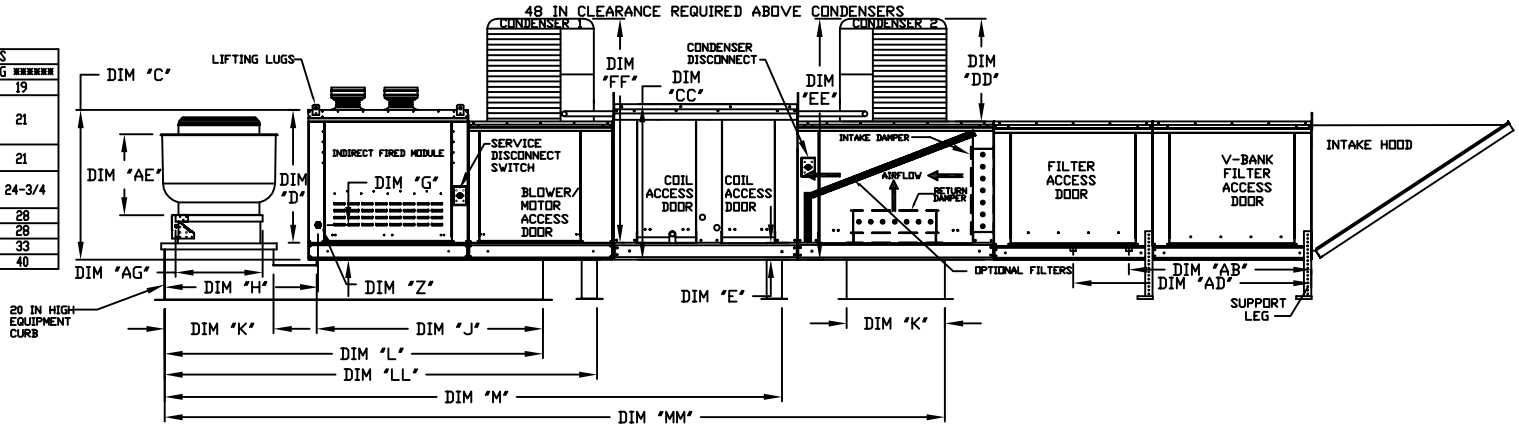

MAX. ROOF OPENING 2" SMALLER THAN CURB OUTSIDE DIMENSION

ALL DIMENSIONS ARE NOMINAL AND GIVEN IN INCHES.

MODEL	UNIT DIMENSIONS															MIXING BOX OPENING					DOWN DISCHARGE OPENING				GAS CONNECTION	# OF FURNACES	WATER INLET		DRAIN OPENING	
	A	B	BB	C	CC	D	E	F	G	H	J	K	L	LL	M	MM	N	P	R	S	U	V	W	X	Y	"Z" (NPT)		AA	AB	AC	AD
1-IBT.150-G10	241-1/4	49-1/2	39-3/8	39-9/16	42-3/4	35-13/16	3-3/4	44-3/8	8-3/4	36-1/8	71	21	106	124-3/16	166-7/16	197-3/4	14	8	14	12-1/2	18	3	16-3/4	3-1/8	21	3/4	1	4-1/2	38-1/2	13	48-1/4
1-IBT.200-G10	241-1/4	49-1/2	39-3/8	39-9/16	42-3/4	35-13/16	3-3/4	44-3/8	8-3/4	36-1/8	71	21	106	124-3/16	166-7/16	197-3/4	14	8	14	12-1/2	18	3	16-3/4	3-1/8	21	3/4	1	4-1/2	38-1/2	13	48-1/4
1-IBT.300-150-150-G10	241-1/4	49-1/2	39-3/8	39-9/16	42-3/4	35-13/16	3-3/4	44-3/8	8-3/4	36-1/8	71	21	106	124-3/16	166-7/16	197-3/4	14	8	14	12-1/2	18	3	16-3/4	3-1/8	21	3/4	2	4-1/2	38-1/2	13	48-1/4
1-IBT.400-200-200-G10	241-1/4	49-1/2	39-3/8	39-9/16	42-3/4	35-13/16	3-3/4	44-3/8	8-3/4	36-1/8	71	21	106	124-3/16	166-7/16	197-3/4	14	8	14	12-1/2	18	3	16-3/4	3-1/8	21	3/4	2	4-1/2	38-1/2	13	48-1/4
2-IBT.200-G15	249-1/4	49-1/2	49-3/8	39-9/16	47-3/4	35-13/16	3-3/4	53-5/8	8-3/4	46-1/8	79	31	124	142-3/16	184-7/16	220-3/4	22-3/4	8	11	7-1/2	24	5	24	3-1/8	21	1	1	4-1/2	38-1/2	18	48-1/4
2-IBT.300-G15	249-1/4	49-1/2	49-3/8	53-7/8	47-3/4	50-1/8	3-3/4	53-5/8	8-3/4	46-1/8	79	31	124	142-3/16	184-7/16	220-3/4	22-3/4	8	11	7-1/2	24	5	24	3-1/8	21	1	1	4-1/2	38-1/2	18	48-1/4
2-IBT.400-G15	249-1/4	49-1/2	49-3/8	53-7/8	47-3/4	50-1/8	3-3/4	53-5/8	8-3/4	46-1/8	79	31	124	142-3/16	184-7/16	220-3/4	22-3/4	8	11	7-1/2	24	5	24	3-1/8	21	1	1	4-1/2	38-1/2	18	48-1/4
2-IBT.400-200-200-G15	249-1/4	49-1/2	49-3/8	39-9/16	47-3/4	35-13/16	3-3/4	53-5/8	8-3/4	46-1/8	79	31	124	142-3/16	184-7/16	220-3/4	22-3/4	8	11	7-1/2	24	5	24	3-1/8	21	1	2	4-1/2	38-1/2	18	48-1/4
2-IBT.600-300-300-G15	249-1/4	49-1/2	49-3/8	53-7/8	47-3/4	50-1/8	3-3/4	53-5/8	8-3/4	46-1/8	79	31	124	142-3/16	184-7/16	220-3/4	22-3/4	8	11	7-1/2	24	5	24	3-1/8	21	1	2	4-1/2	38-1/2	18	48-1/4
2-IBT.800-400-400-G15	249-1/4	49-1/2	49-3/8	53-7/8	47-3/4	50-1/8	3-3/4	53-5/8	8-3/4	46-1/8	79	31	124	142-3/16	184-7/16	220-3/4	22-3/4	8	11	7-1/2	24	5	24	3-1/8	21	1	2	4-1/2	38-1/2	18	48-1/4
3-IBT.400-G18	266-1/4	57-3/4	54-3/8	57-1/16	56-3/8	51-13/16	5-1/4	51-5/8	10-3/4	50-1/8	84	35	133	151-3/16	193-7/16	232-3/4	28	8	7	4-1/2	30	6-3/4	26-1/2	4-1/8	26-1/2	1	1	4-1/2	44	20	57-1/4
3-IBT.600-300-300-G18	266-1/4	57-3/4	54-3/8	57-1/16	56-3/8	51-13/16	5-1/4	51-5/8	10-3/4	50-1/8	84	35	133	151-3/16	193-7/16	232-3/4	28	8	7	4-1/2	30	6-3/4	26-1/2	4-1/8	26-1/2	1	2	4-1/2	44	20	57-1/4
3-IBT.800-400-400-G18	266-1/4	57-3/4	54-3/8	57-1/16	56-3/8	51-13/16	5-1/4	51-5/8	10-3/4	50-1/8	84	35	133	151-3/16	193-7/16	232-3/4	28	8	7	4-1/2	30	6-3/4	26-1/2	4-1/8	26-1/2	1	2	4-1/2	44	20	57-1/4

V-BANK INFORMATION
FILTER SIZE & QTY
20"x25"x2" (3)
20"x25"x2" (3)
20"x25"x2" (3)
20"x25"x2" (3)
16"x20"x2" (8)
16"x20"x2" (8)
16"x20"x2" (8)
16"x20"x2" (8)
16"x20"x2" (8)
16"x20"x2" (8)
16"x20"x2" (8)
20"x25"x2" (8)
20"x25"x2" (8)
20"x25"x2" (8)

UNIT INFORMATION

MODEL	BTU RANGE (MBH)***			TURNDOWN RATIO	COMBUSTION EFFICIENCY****	GAS PRESSURE*****		STANDARD EVAPORATIVE COOLING UNIT					CELDEK EVAPORATIVE COOLING UNIT				
	BURNER INPUT	BTU LOW	BTU HIGH			MIN	MAX	TOT. WEIGHT	MEDIA SIZE & QTY	VEL. @ MAX. CFM	NOZZLES	MAX. FLOW RATE	TOT. WEIGHT	MEDIA SIZE & QTY	VEL. @ MAX. CFM	NOZZLES	MAX. FLOW RATE
1-IBT.150-G10	150	20	120	6	80.0%	7" WC	14" WC	1552 LBS	20"x25"x2" (3)	406 FPM	6	3 GPH	1557 LBS	20"x24"x12"	1050 FPM	12	3.9 GPH
1-IBT.200-G10	200	26.7	160	6	80.0%	7" WC	14" WC	1582 LBS	20"x25"x2" (3)	406 FPM	6	3 GPH	1587 LBS	20"x24"x12"	1050 FPM	12	3.9 GPH
1-IBT.300-150-150-G10	300	20	240	12	80.0%	7" WC	14" WC	1637 LBS	20"x25"x2" (3)	406 FPM	6	3 GPH	1642 LBS	20"x24"x12"	1050 FPM	12	3.9 GPH
1-IBT.400-200-200-G10	400	26.7	320	12	80.0%	7" WC	14" WC	1711 LBS	20"x25"x2" (3)	406 FPM	6	3 GPH	1716 LBS	20"x24"x12"	1050 FPM	12	3.9 GPH
2-IBT.200-G15	200	26.7	160	6	80.0%	7" WC	14" WC	1985 LBS	16"x20"x2" (8)	429 FPM	10	5 GPH	1980 LBS	25"x32"x12"	1080 FPM	20	6.5 GPH
2-IBT.300-G15	300	40	240	6	80.0%	7" WC	14" WC	2077 LBS	16"x20"x2" (8)	429 FPM	10	5 GPH	2072 LBS	25"x32"x12"	1080 FPM	20	6.5 GPH
2-IBT.400-G15	400	53.3	320	6	80.0%	7" WC	14" WC	2156 LBS	16"x20"x2" (8)	429 FPM	10	5 GPH	2151 LBS	25"x32"x12"	1080 FPM	20	6.5 GPH
2-IBT.400-200-200-G15	400	26.7	320	12	80.0%	7" WC	14" WC	2044 LBS	16"x20"x2" (8)	429 FPM	10	5 GPH	2039 LBS	25"x32"x12"	1080 FPM	20	6.5 GPH
2-IBT.600-300-300-G15	600	40	480	12	80.0%	7" WC	14" WC	2198 LBS	16"x20"x2" (8)	429 FPM	10	5 GPH	2193 LBS	25"x32"x12"	1080 FPM	20	6.5 GPH
2-IBT.800-400-400-G15	800	53.3	640	12	80.0%	7" WC	14" WC	2311 LBS	16"x20"x2" (8)	429 FPM	10	5 GPH	2306 LBS	25"x32"x12"	1080 FPM	20	6.5 GPH
3-IBT.400-G18	400	53.3	320	6	80.0%	7" WC	14" WC	2732 LBS	20"x25"x2" (8)	348 FPM	14	7 GPH	2722 LBS	30"x36"x12"	1067 FPM	28	8.4 GPH
3-IBT.600-300-300-G18	600	40	480	12	80.0%	7" WC	14" WC	2850 LBS	20"x25"x2" (8)	348 FPM	14	7 GPH	2840 LBS	30"x36"x12"	1067 FPM	28	8.4 GPH
3-IBT.800-400-400-G18	800	53.3	640	12	80.0%	7" WC	14" WC	2988 LBS	20"x25"x2" (8)	348 FPM	14	7 GPH	2978 LBS	30"x36"x12"	1067 FPM	28	8.4 GPH

OPTIONAL MIXING BOX FILTERS	
MODEL	FILTER SIZE & QTY
G10	10"x16"x2" (5)
G15	20"x25"x2" (2), 16"x25"x2" (1)
G18	15"x20"x2" (4), 15"x15"x2" (2)

CONDENSER INFORMATION						
MODEL	WEIGHT*	TONNAGE		CC	DD	EE
		#1	#2			
2 TON-G10	119 LBS	2 TON	N/A	26-5/16	56-1/16	52-3/8
3 TON-G10	134 LBS	3 TON	N/A	33-5/16	63-1/16	59-3/8
5 TON-G10	253 LBS	2 TON	3 TON	33-5/16	63-1/16	59-3/8
5 TON-G10	302 LBS	2.5 TON	2.5TON	32-13/16	62-9/16	58-7/8
5 TON-G15	197 LBS	5 TON	N/A	32-13/16	69-9/16	65-7/8
5 TON-G15	348 LBS	2.5 TON	5 TON	32-13/16	69-9/16	65-7/8
8 TON-G15	331 LBS	3 TON	5 TON	33-5/16	71-11/16	68
10 TON-G15	394 LBS	5 TON	5 TON	32-13/16	69-9/16	65-7/8
10 TON-G18	394 LBS	5 TON	5 TON	32-13/16	76-3/16	70-7/8
10 TON-920	394 LBS	5 TON	5 TON	32-13/16	97-3/16	91-15/16

* ADD CONDENSING UNIT WEIGHT TO WEIGHT IN TABLE ABOVE

** ALL MODELS ARE FULLY ELECTRONICALLY MODULATING

*** COMBUSTION EFFICIENCY OF EVERY UNIT IS 80.0% OVER THE ENTIRE GAS FIRING RANGE.

**** GAS PRESSURES IN TABLE ARE FOR NATURAL GAS, LP MINIMUM GAS INLET PRESSURE = 11" W.C.

***** MAX. EVAP WATER PRESSURE = 50 PSI @ 70 DEG. F

****** 9 INCH HIGH EXHAUST ADAPTER MAY BE REQUIRED