OUTDOOR SIDE DISCHARGE MOD PACKAGE UNIT, V-BANK, LPD EVAPORATIVE COOLER INTAKE, INTAKE HOOD AND OPTIONAL MIXING BOX

IHVBLPDECMBCCSAH-MPU
REV.#2 06/15/2015

CONDENSER INFORMATION						
MODEL	WEIGHT*	TONNAGE #1	TONNAGE #2	CC	DD	EE
2 TON-G10	119 LBS	2 TON	N/A	26-5/16	56-1/16	52-3/8
3 TON-G10	134 LBS	3 TON	N/A	33-5/16	63-1/16	59-3/8
5 TON-G10	253 LBS	2 TON	3 TON	33-5/16	63-1/16	59-3/8
5 TON-G10	302 LBS	2.5 TON	2.5 TON	32-13/16	62-9/16	58-7/8
5 TON-G12	197 LBS	5 TON	N/A	32-13/16	69-9/16	65-7/8
7.5 TON-G12	348 LBS	2.5 TON	5 TON	32-13/16	69-9/16	65-7/8
10 TON-G12	394 LBS	5 TON	5 TON	32-13/16	69-9/16	65-7/8
5 TON-G15	197 LBS	5 TON	N/A	32-13/16	69-9/16	65-7/8
7.5 TON-G15	302 LBS	2.5 TON	5 TON	32-13/16	69-9/16	65-7/8
8 TON-G15	331 LBS	3 TON	5 TON	33-5/16	71-11/16	68
10 TON-G15	394 LBS	5 TON	5 TON	32-13/16	69-9/16	65-7/8
10 TON-G18	394 LBS	5 TON	5 TON	32-13/16	76-3/16	70-7/8
10 TON-920	394 LBS	5 TON	5 TON	32-13/16	97-3/16	91-15/16

:410A REFRIGERANT

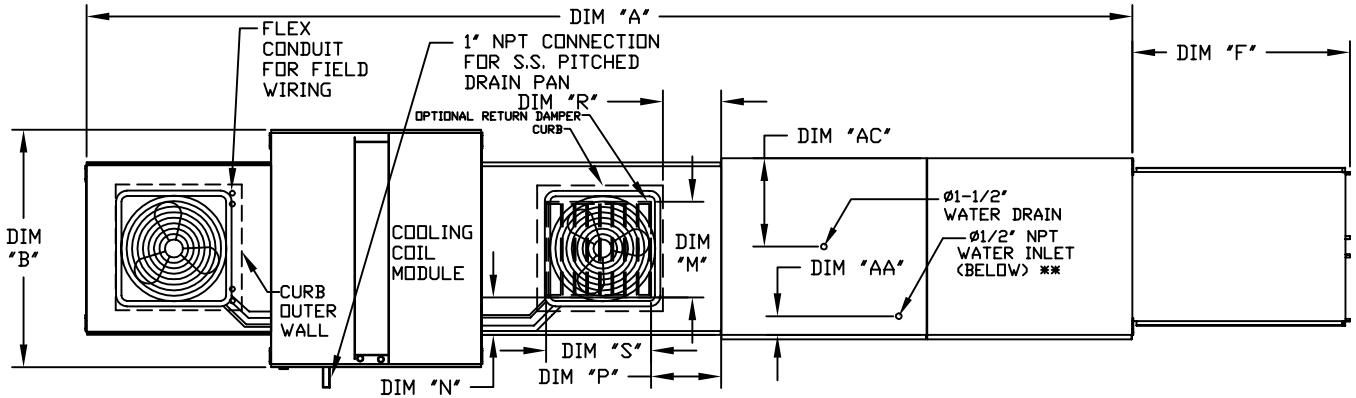

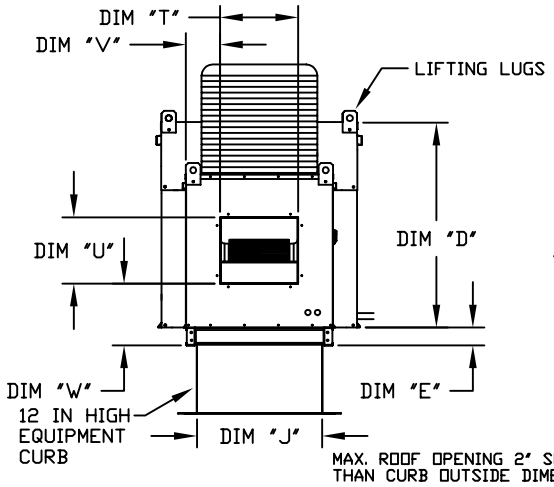

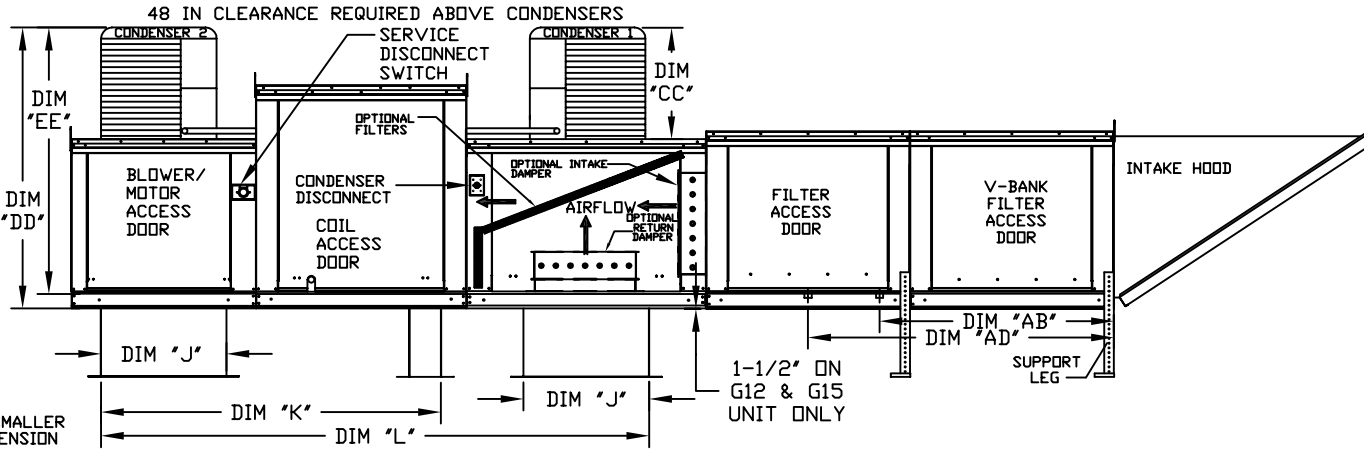

ALL DIMENSIONS ARE NOMINAL AND GIVEN IN INCHES.

	UNIT DIMENSIONS														DISCHARGE OPENING				TONNAGE RANGE		WATER INLET		DRAIN OPENING	
MODEL	A	B	C	D	E	F	J	K	L	M	N	P	R	S	T	U	V	W	MIN	MAX	AA	AB	AC	AD
G10	181-1/8	39-3/8	42-3/4	39	3-3/4	53-5/8	21	65-13/16	98-5/8	14	8	14	12-1/2	18	13-1/4	11-1/2	6-3/8	11-7/8	2 Ton	5 Ton	4-1/2	38-1/2	18	48-1/4
G12	201-1/8	49-3/8	47-3/4	44	3-3/4	51-5/8	31	74-5/8	112-5/8	22-3/4	8	11	7-1/2	24	15-3/4	13-9/16	10-1/8	13-1/16	5 Ton	10 Ton	4-1/2	44	20	57-1/4
G15	201-1/8	49-3/8	47-3/4	44	3-3/4	51-5/8	31	74-5/8	112-5/8	22-3/4	8	11	7-1/2	24	18-3/4	16	8-5/8	14-1/16	5 Ton	10 Ton	4-1/2	44	20	57-1/4
G18	200-3/8	54-3/8	56-3/8	51-1/8	5-1/4	76-3/8	35	79-3/16	120-1/8	28	8	7	4-1/2	30	22	19	9	17-7/8	10 Ton	10 Ton	4-1/2	41-1/8	23-1/2	52-7/8
920	243-9/16	60-7/16	64-3/8	59-1/8	5-1/4	71-3/8	42	104-9/32	153-15/16	33	10	11	8	36	24-7/8	24-7/8	11-1/16	19-1/8	10 Ton	10 Ton	4-1/2	41-1/8	28-7/8	52-7/8

V-BANK FILTER

MODEL	FILTER SIZE & QTY
G10	16"x20"x2" (8)
G12	20"x25"x2" (8)
G15	20"x25"x2" (8)
G18	16"x20"x2" (15)
920	20"x25"x2" (12)

LPD CELDEK EVAPORATIVE COOLING UNIT			
TOT. WEIGHT	MEDIA SIZE & QTY	NOZZLES	MAX. FLOW RATE
1090 LBS	25"x32"x12"	20	6.5 GPH
1480 LBS	30"x36"x12"	28	8.4 GPH
1490 LBS	30"x36"x12"	28	8.4 GPH
1965 LBS	38"x43"x12"	35	10.15 GPH
2875 LBS	45"x54"x12"	42	12.6 GPH

OPTIONAL MIXING BOX FILTERS
10"x16"x2" (5)
20"x25"x2" (2), 16"x"25"x2" (1)
20"x25"x2" (2), 16"x"25"x2" (1)
15"x20"x2" (4), 15"x15"x2" (2)
18"x25"x2" (4), 16"x20"x2" (2)

*ADD CONDENSING UNIT WEIGHT TO WEIGHT IN TABLES ABOVE
** MAX. EVAP. WATER PRESSURE 50 PSI @ 70 DEG. F