MODULAR OUTDOOR DOWN DISCHARGE IBT HEATER ROOF TOP PACKAGE WITH COOLING COIL, MIXING BOX, AND EVAPORATIVE COOLER INTAKE AND INTAKE HOOD

IHLPDECMBCCSAHIBTRTP-MPU-15
REV.#3 06/15/2015

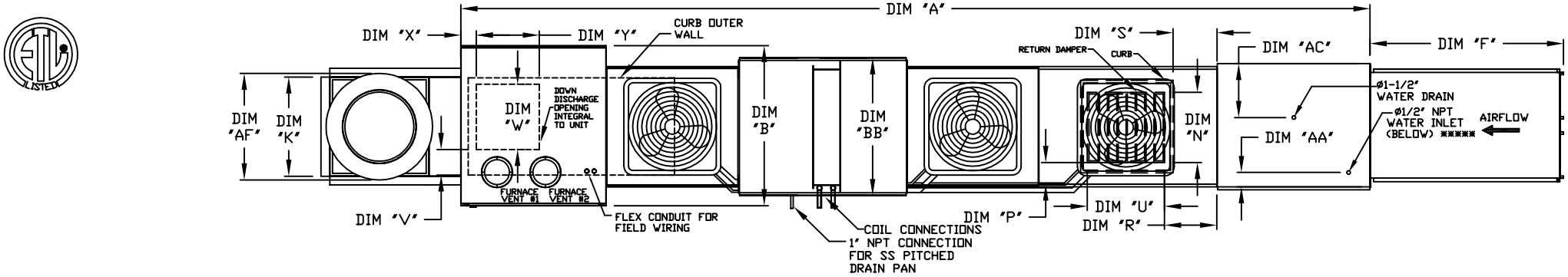

48 IN CLEARANCE REQUIRED ABOVE CONDENSERS

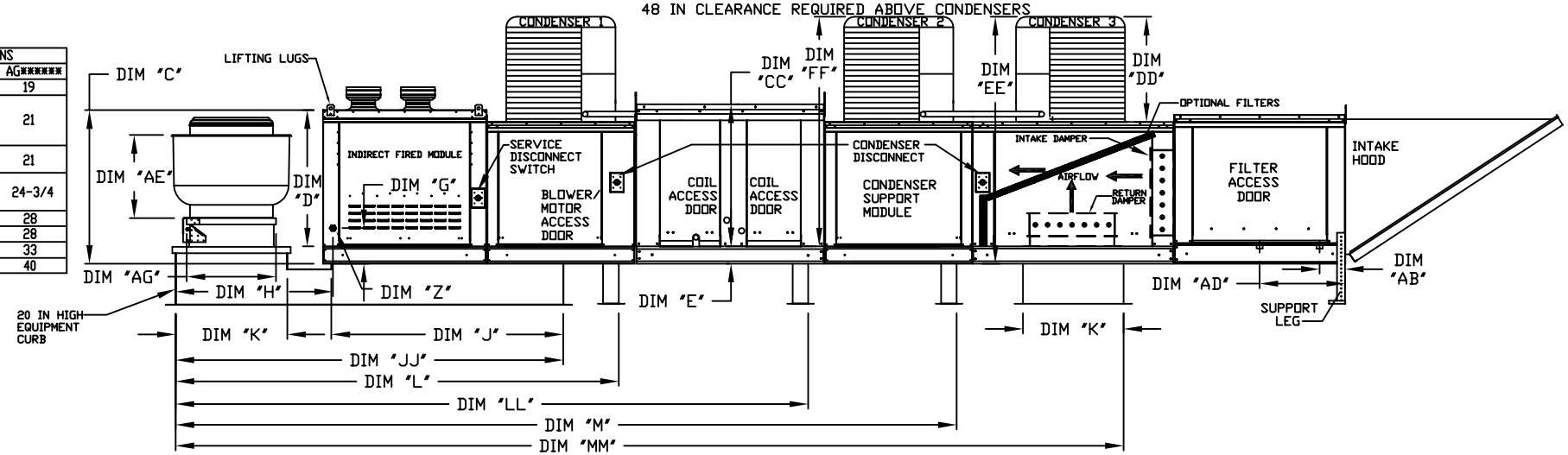

MAX. ROOF OPENING 2" SMALLER THAN CURB OUTSIDE DIMENSION

EXHAUST UNIT DIMENSIONS			
MODEL #	AE	AF	AG******
DU12HFA	14-1/2	22	19
NCA8FA DU25HFA DU30HFA DU33HFA	18-1/2	27-1/4	21
NCA10FA DU50HFA	21-1/2	30-1/4	21
NCA14FA DU75HFA DU85HFA	23	33-3/4	24-3/4
NCA16FA	23-1/2	39-3/8	28
NCA18FA	29-1/2	38-7/8	28
NCA24FA	30-5/8	43-3/8	33
NCA30FA	33-1/2	52-3/4	40

ALL DIMENSIONS ARE NOMINAL AND GIVEN IN INCHES.

MODEL	UNIT DIMENSIONS																	MIXING BOX OPENING					DOWN DISCHARGE OPENING				GAS CONNECTION	# OF FURNACES	WATER INLET		DRAIN OPENING	
	A	B	BB	C	CC	D	E	F	G	H	J	K	JJ	L	LL	M	MM	N	P	R	S	U	V	W	X	Y	"Z" (NPT)		AA	AB	AC	AD
3-IBT.400-G18	267-3/8	57-3/4	54-3/8	57-1/16	56-3/8	51-13/16	5-1/4	76-3/8	10-3/4	50-1/8	84	35	133	151-3/16	193-7/16	235-9/16	274-7/8	28	8	7	4-1/2	30	6-3/4	26-1/2	4-1/8	26-1/2	1	1	4-1/2	5-3/4	23-1/2	17-1/2
3-IBT.600-300-300-G18	267-3/8	57-3/4	54-3/8	57-1/16	56-3/8	51-13/16	5-1/4	76-3/8	10-3/4	50-1/8	84	35	133	151-3/16	193-7/16	235-9/16	274-7/8	28	8	7	4-1/2	30	6-3/4	26-1/2	4-1/8	26-1/2	1	2	4-1/2	5-3/4	23-1/2	17-1/2
3-IBT.800-400-400-G18	267-3/8	57-3/4	54-3/8	57-1/16	56-3/8	51-13/16	5-1/4	76-3/8	10-3/4	50-1/8	84	35	133	151-3/16	193-7/16	235-9/16	274-7/8	28	8	7	4-1/2	30	6-3/4	26-1/2	4-1/8	26-1/2	1	2	4-1/2	5-3/4	23-1/2	17-1/2

UNIT INFORMATION

MODEL	BTU RANGE (MBH)**			TURNDOWN RATIO	COMBUSTION EFFICIENCY***	GAS PRESSURE****	
	BURNER INPUT	BTU LOW	BTU HIGH			MIN	MAX
3-IBT.400-G18	400	53.3	320	6	80.0%	7" WC	14" WC
3-IBT.600-300-300-G18	600	40	480	12	80.0%	7" WC	14" WC
3-IBT.800-400-400-G18	800	53.3	640	12	80.0%	7" WC	14" WC

CELDEK EVAPORATIVE COOLING UNIT			
TOT. WEIGHT	MEDIA SIZE & QTY	NOZZLES	MAX. FLOW RATE
2952 LBS	38"x43"x12"	35	10.15 GPH
3070 LBS	38"x43"x12"	35	10.15 GPH
3208 LBS	38"x43"x12"	35	10.15 GPH

CONDENSER INFORMATION							
MODEL	WEIGHT*	TONNAGE			CC	DD	EE
		#1	#2	#3			
15 TON-G18	591 LBS	5 TON	5 TON	5 TON	32-13/16	76-3/16	70-7/8
15 TON-920	591 LBS	5 TON	5 TON	5 TON	32-13/16	97-3/16	91-15/16

R410A REFRIGERANT

	OPTIONAL MIXING BOX FILTERS
MODEL	FILTER SIZE & QTY
G18	15"x20"x2" (4), 15"x15"x2" (2)

* ADD CONDENSING UNIT WEIGHT TO WEIGHT IN TABLE ABOVE

** ALL MODELS ARE FULLY ELECTRONICALLY MODULATING

*** COMBUSTION EFFICIENCY OF EVERY UNIT IS 80.0% OVER THE ENTIRE GAS FIRING RANGE.

**** GAS PRESSURES IN TABLE ARE FOR NATURAL GAS, LP MINIMUM GAS INLET PRESSURE = 11" W.C.

***** MAX. EVAP WATER PRESSURE UNIT INFORMATION

****** 9 INCH HIGH EXHAUST ADAPTER MAY BE REQUIRED