OUTSIDE SIDE DISCHARGE MOD PACKAGE UNIT, HEATING COIL, V-BANK FILTER, LPD EVAPORATIVE COOLER INTAKE, INTAKE HOOD AND OPTIONAL MIXING BOX

IHVBLPDECMBHCCCSAH-MPU
REV.#2, 06/15/2015

CONDENSER INFORMATION						
MODEL	WEIGHT*	TONNAGE #1	TONNAGE #2	CC	DD	EE
2 TON-G10	119 LBS	2 TON	N/A	26-5/16	56-1/16	52-3/8
3 TON-G10	134 LBS	3 TON	N/A	33-5/16	63-1/16	59-3/8
5 TON-G10	253 LBS	2 TON	3 TON	33-5/16	63-1/16	59-3/8
5 TON-G10	302 LBS	2.5 TON	2.5 TON	32-13/16	62-9/16	58-7/8
5 TON-G12	197 LBS	5 TON	N/A	32-13/16	69-9/16	65-7/8
7.5 TON-G12	348 LBS	2.5 TON	5 TON	32-13/16	69-9/16	65-7/8
10 TON-G12	394 LBS	5 TON	5 TON	32-13/16	69-9/16	65-7/8
5 TON-G15	197 LBS	5 TON	N/A	32-13/16	69-9/16	65-7/8
7.5 TON-G15	302 LBS	2.5 TON	5 TON	32-13/16	69-9/16	65-7/8
8 TON-G15	331 LBS	3 TON	5 TON	33-5/16	71-11/16	68
10 TON-G15	394 LBS	5 TON	5 TON	32-13/16	69-9/16	65-7/8
10 TON-G18	394 LBS	5 TON	5 TON	32-13/16	76-3/16	70-7/8
10 TON-920	394 LBS	5 TON	5 TON	32-13/16	97-3/16	91-15/16

R410A REFRIGERANT

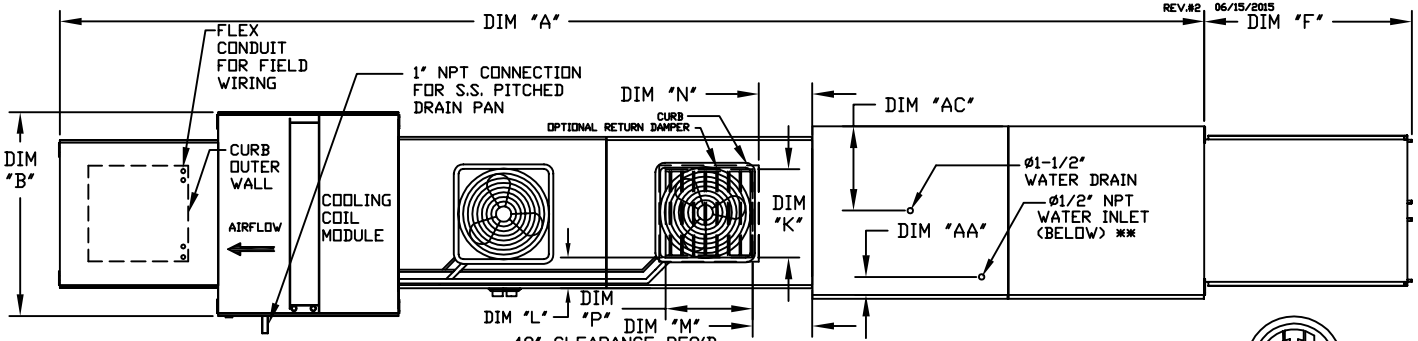

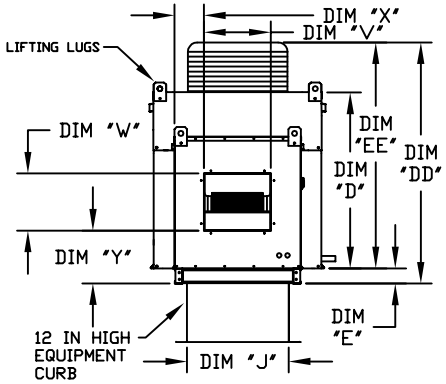

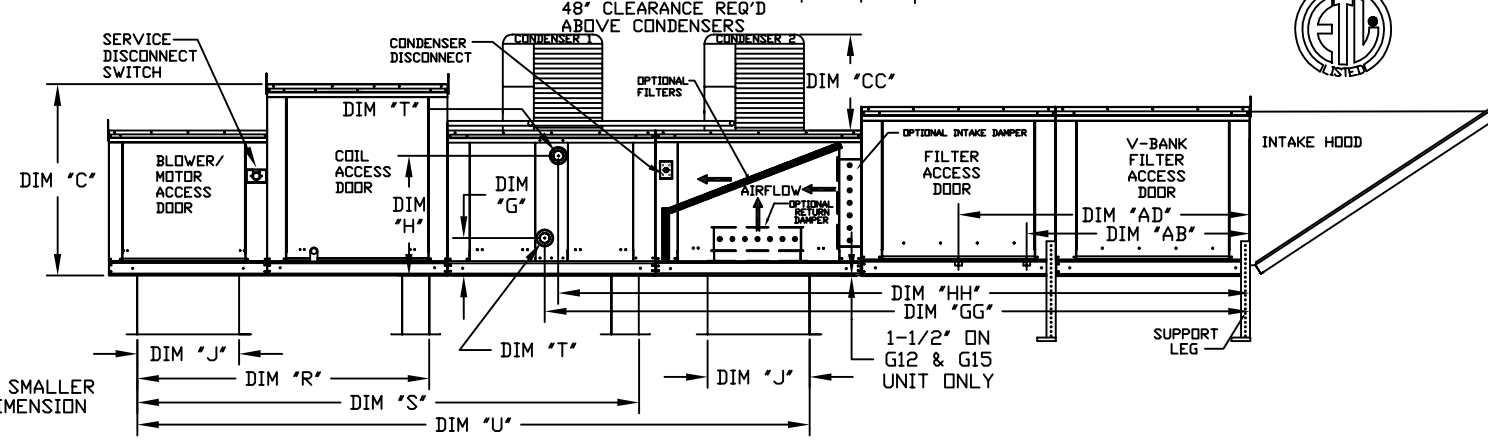

ALL DIMENSIONS ARE NOMINAL AND GIVEN IN INCHES.

	UNIT DIMENSIONS															DISCHARGE OPENING				TONNAGE RANGE		WATER INLET		DRAIN OPENING	
MODEL	A	B	C	D	E	F	J	K	L	M	N	P	R	S	U	V	W	X	Y	MIN	MAX	AA	AB	AC	AD
G10	223-3/8	39-3/8	42-3/4	39	3-3/4	53-5/8	21	14	8	14	12-1/2	18	65-13/16	107-15/16	140-7/8	13-1/4	11-1/2	6-3/8	11-7/8	2 Ton	5 Ton	4-1/2	38-1/2	18	48-1/4
G12	243-3/8	49-3/8	47-3/4	44	3-3/4	51-5/8	31	22-3/4	8	11	7-1/2	24	74-5/8	116-3/4	154-7/8	15-3/4	13-9/16	10-1/8	13-1/16	5 Ton	10 Ton	4-1/2	44	20	57-1/4
G15	243-3/8	49-3/8	47-3/4	44	3-3/4	51-5/8	31	22-3/4	8	11	7-1/2	24	74-5/8	116-3/4	154-7/8	18-3/4	16	8-5/8	14-1/16	5 Ton	10 Ton	4-1/2	44	20	57-1/4
G18	242-5/8	54-3/8	56-3/8	51-1/8	5-1/4	76-3/8	35	28	8	7	4-1/2	30	79-3/16	121-5/16	162-3/8	22	19	9	17-7/8	10 Ton	10 Ton	4-1/2	41-1/8	23-1/2	52-7/8
920	297-7/8	60-7/16	64-3/8	59-1/8	5-1/4	71-3/8	42	33	10	11	8	36	104-9/32	158-15/32	208	24-7/8	24-7/8	11-1/16	19-1/8	10 Ton	10 Ton	4-1/2	41-1/8	28-7/8	52-7/8

HOT WATER COIL MODULE

MODEL	TOTAL CAPACITY (MBH)	PIPE CONNECTION "T" (MPT)	G	GG	H	HH
G10	165.63	2	8-1/4	129-3/16	24-3/4	126-7/16
G12	320.88	2	8-1/4	141-3/16	28-3/4	138-7/16
G15	320.88	2	8-1/4	141-3/16	28-3/4	138-7/16
G18	514.97	1-1/2	9-1/2	135-3/16	38	132-15/16
920	831.87	2-1/2	10	153-5/8	45-1/2	150

STEAM COIL MODULE

MODEL	TOTAL CAPACITY (MBH)	PIPE CONNECTION "T" (MPT)	STEAM PSI	G	GG	H	HH
G10	176.49	2-1/2	5	8-3/4	127-13/16	16-15/16	127-13/16
G12	328.19	2-1/2	5	8-3/4	139-13/16	18-3/8	139-13/16
G15	328.19	2-1/2	5	8-3/4	139-13/16	18-3/8	139-13/16
G18	505.64	2-1/2	5	10-1/4	134-1/16	23-5/8	134-1/16
920	812.24	2-1/2	5	10-1/4	152-3/16	28-5/8	152-3/16

V-BANK FILTER

MODEL	FILTER SIZE & QTY
G10	16"x20"x2" (8)
G12	20"x25"x2" (8)
G15	20"x25"x2" (8)
G18	16"x20"x2" (15)
920	20"x25"x2" (12)

CELDEK EVAPORATIVE COOLING UNIT W/						
	MODEL	TOT. WEIGHT		TOT. WEIGHT	MEDIA SIZE & QTY	NOZZLES	MAX. FLOW RATE
HOT WATER COIL MODULE	G10	1250 LBS	STEAM COIL MODULE	1250 LBS	25"x32"x12"	20	6.5 GPH
	G12	1700 LBS		1700 LBS	30"x36"x12"	28	8.4 GPH
	G15	1710 LBS		1710 LBS	30"x36"x12"	28	8.4 GPH
	G18	2225 LBS		2220 LBS	38"x43"x12"	35	10.15 GPH
	920	3310 LBS		3285 LBS	45"x54"x12"	42	12.6 GPH

OPTIONAL MIXING BOX FILTERS
FILTER SIZE & QTY
10"x16"x2" (5)
20"x25"x2" (2), 16"x25"x2" (1)
20"x25"x2" (2), 16"x25"x2" (1)
15"x20"x2" (4), 15"x15"x2" (2)
18"x25"x2" (4), 16"x20"x2" (2)

*ADD CONDENSING UNIT WEIGHT TO WEIGHT IN TABLES ABOVE