OUTDOOR SIDE DISCHARGE MOD PACKAGE UNIT, V-BANK, EVAPORATIVE COOLER INTAKE, INTAKE HOOD AND OPTIONAL MIXING BOX

IHVBECMBCCSAH-MPU
REV.#2 06/15/2015

CONDENSER INFORMATION						
MODEL	WEIGHT*	TONNAGE #1	TONNAGE #2	CC	DD	EE
2 TON-G10	119 LBS	2 TON	N/A	26-5/16	56-1/16	52-3/8
3 TON-G10	134 LBS	3 TON	N/A	33-5/16	63-1/16	59-3/8
5 TON-G10	253 LBS	2 TON	3 TON	33-5/16	63-1/16	59-3/8
5 TON-G10	302 LBS	2.5 TON	2.5 TON	32-13/16	62-9/16	58-7/8
5 TON-G12	197 LBS	5 TON	N/A	32-13/16	69-9/16	65-7/8
7.5 TON-G12	348 LBS	2.5 TON	5 TON	32-13/16	69-9/16	65-7/8
10 TON-G12	394 LBS	5 TON	5 TON	32-13/16	69-9/16	65-7/8
5 TON-G15	197 LBS	5 TON	N/A	32-13/16	69-9/16	65-7/8
7.5 TON-G15	302 LBS	2.5 TON	5 TON	32-13/16	69-9/16	65-7/8
8 TON-G15	331 LBS	3 TON	5 TON	33-5/16	71-11/16	68
10 TON-G15	394 LBS	5 TON	5 TON	32-13/16	69-9/16	65-7/8
10 TON-G18	394 LBS	5 TON	5 TON	32-13/16	76-3/16	70-7/8
10 TON-920	394 LBS	5 TON	5 TON	32-13/16	97-3/16	91-15/16

:410A REFRIGERANT

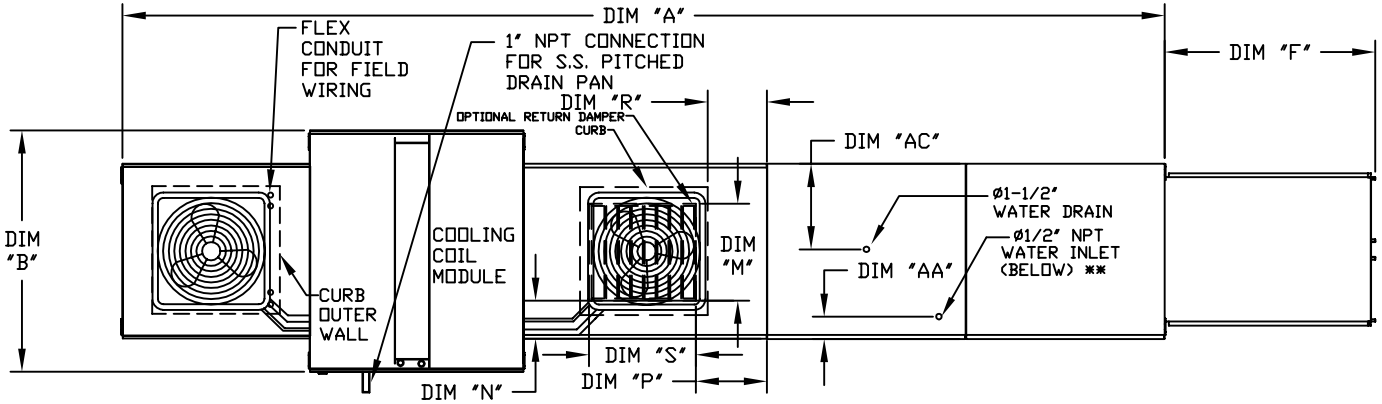

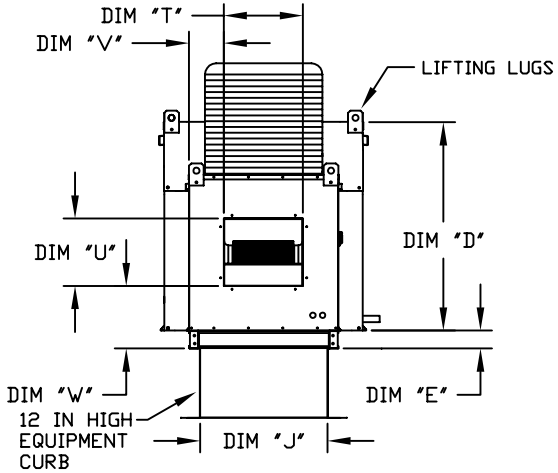

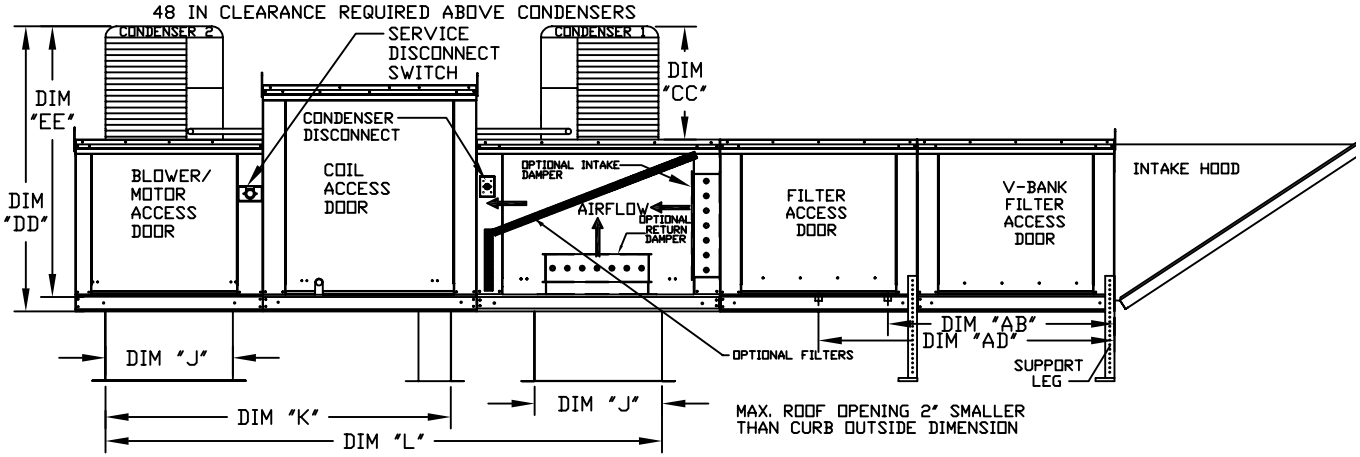

ALL DIMENSIONS ARE NOMINAL AND GIVEN IN INCHES.

	UNIT DIMENSIONS														DISCHARGE OPENING				TONNAGE RANGE		WATER INLET		DRAIN OPENING	
MODEL	A	B	C	D	E	F	J	K	L	M	N	P	R	S	T	U	V	W	MIN	MAX	AA	AB	AC	AD
G10	181-1/8	39-3/8	42-3/4	39	3-3/4	44-3/8	21	65-13/16	98-5/8	14	8	14	12-1/2	18	13-1/4	11-1/2	6-3/8	11-7/8	2 Ton	5 Ton	4-1/2	38-1/2	13	48-1/4
G12	189-1/8	49-3/8	47-3/4	44	3-3/4	53-5/8	31	74-5/8	112-5/8	22-3/4	8	11	7-1/2	24	15-3/4	13-9/16	10-1/8	13-1/16	5 Ton	10 Ton	4-1/2	38-1/2	18	48-1/4
G15	189-1/8	49-3/8	47-3/4	44	3-3/4	53-5/8	31	74-5/8	112-5/8	22-3/4	8	11	7-1/2	24	18-3/4	16	8-5/8	14-1/16	5 Ton	10 Ton	4-1/2	38-1/2	18	48-1/4
G18	206-1/8	54-3/8	56-3/8	51-1/8	5-1/4	51-5/8	35	79-3/16	120-1/8	28	8	7	4-1/2	30	22	19	9	17-7/8	10 Ton	10 Ton	4-1/2	44	20	57-1/4
920	243-9/16	60-7/16	64-3/8	59-1/8	5-1/4	76-3/8	42	104-9/32	153-15/16	33	10	11	8	36	24-7/8	24-7/8	11-1/16	19-1/8	10 Ton	10 Ton	4-1/2	41-1/8	23-1/2	52-7/8

UNIT INFORMATION

MODEL	FILTER SIZE & QTY	MAX. FILTER VELOCITY	STANDARD EVAPORATIVE COOLING UNIT					CELDEK EVAPORATIVE COOLING UNIT					OPTIONAL MIXING BOX FILTERS
			TOT. WEIGHT	MEDIA SIZE & QTY	VEL. @ MAX. CFM	NOZZLES	MAX. FLOW RATE	TOT. WEIGHT	MEDIA SIZE & QTY	VEL. @ MAX. CFM	NOZZLES	MAX. FLOW RATE	
G10	20"x25"x2" (3)	@3500 CFM = 406 FPM	985 LBS	20"x25"x2" (3)	406 FPM	6	3 GPH	990 LBS	20"x24"x12"	1050 FPM	12	3.9 GPH	10"x16"x2" (5)
G12	16"x20"x2" (8)	@5000 CFM = 358 FPM	1375 LBS	16"x20"x2" (8)	358 FPM	10	5 GPH	1370 LBS	25"x32"x12"	900 FPM	20	6.5 GPH	20"x25"x2" (2), 16"x"25"x2" (1)
G15	16"x20"x2" (8)	@6000 CFM = 429 FPM	1385 LBS	16"x20"x2" (8)	429 FPM	10	5 GPH	1380 LBS	25"x32"x12"	1080 FPM	20	6.5 GPH	20"x25"x2" (2), 16"x"25"x2" (1)
G18	20"x25"x2" (8)	@8000 CFM = 348 FPM	1715 LBS	20"x25"x2" (8)	348 FPM	14	7 GPH	1705 LBS	30"x36"x12"	1067 FPM	28	8.4 GPH	15"x20"x2" (4), 15"x15"x2" (2)
920	16"x20"x2" (15)	@15000 CFM = 572 FPM	2765 LBS	16"x20"x2" (15)	572 FPM	24	12 GPH	2735 LBS	38"x43"x12"	1322 FPM	35	10.15 GPH	18"x25"x2" (4), 16"x20"x2" (2)

*ADD CONDENSING UNIT WEIGHT TO WEIGHT IN TABLES ABOVE

*** MAX. EVAP. WATER PRESSURE = 50 PSI @ 70 DEG. F