OUTSIDE DOWN DISCHARGE MOD PACKAGE UNIT, HEATING COIL, V-BANK FILTER, LPD EVAPORATIVE COOLER INTAKE, SCREEN INTAKE AND OPTIONAL MIXING BOX

SIVBLPDECMBHCCCDAH-MPU
REV.#2, 06/15/2015

CONDENSER INFORMATION						
MODEL	WEIGHT*	TONNAGE #1	TONNAGE #2	CC	DD	EE
2 TON-G10	119 LBS	2 TON	N/A	26-5/16	56-1/16	52-3/8
3 TON-G10	134 LBS	3 TON	N/A	33-5/16	63-1/16	59-3/8
5 TON-G10	253 LBS	2 TON	3 TON	33-5/16	63-1/16	59-3/8
5 TON-G10	302 LBS	2.5 TON	2.5 TON	32-13/16	62-9/16	58-7/8
5 TON-G12	197 LBS	5 TON	N/A	32-13/16	69-9/16	65-7/8
7.5 TON-G12	348 LBS	2.5 TON	5 TON	32-13/16	69-9/16	65-7/8
10 TON-G12	394 LBS	5 TON	5 TON	32-13/16	69-9/16	65-7/8
5 TON-G15	197 LBS	5 TON	N/A	32-13/16	69-9/16	65-7/8
7.5 TON-G15	302 LBS	2.5 TON	5 TON	32-13/16	69-9/16	65-7/8
8 TON-G15	331 LBS	3 TON	5 TON	33-5/16	71-11/16	68
10 TON-G15	394 LBS	5 TON	5 TON	32-13/16	69-9/16	65-7/8
10 TON-G18	394 LBS	5 TON	5 TON	32-13/16	76-3/16	70-7/8
10 TON-920	394 LBS	5 TON	5 TON	32-13/16	97-3/16	91-15/16

:410A REFRIGERANT

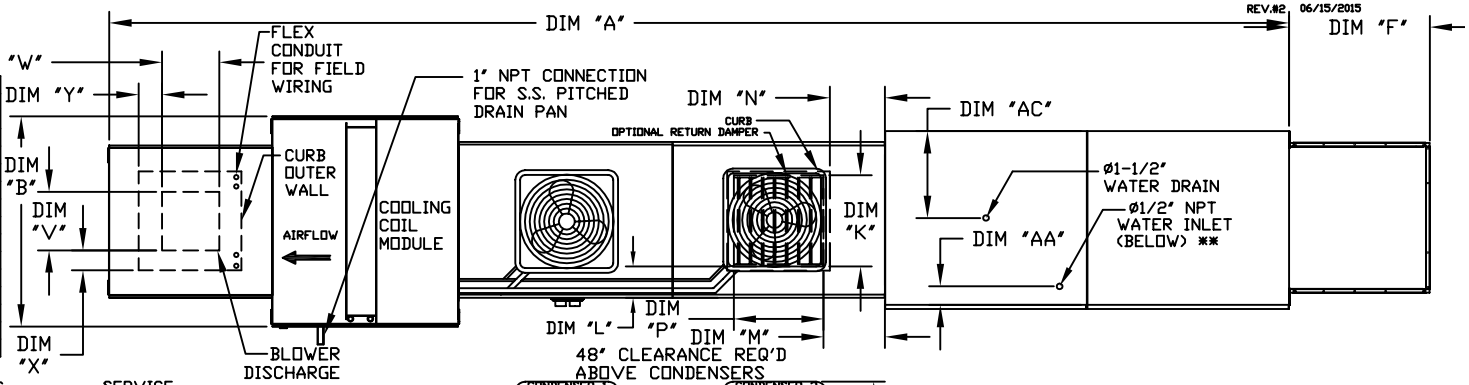

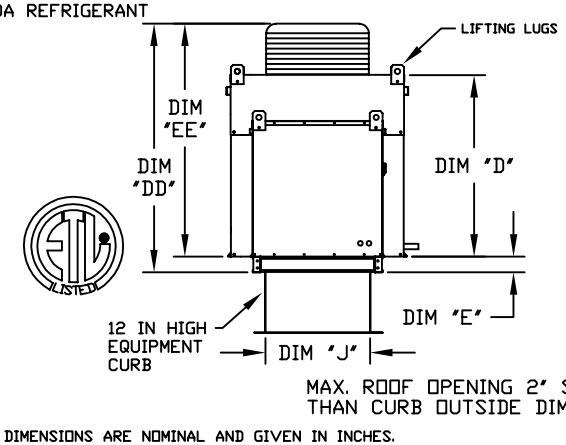

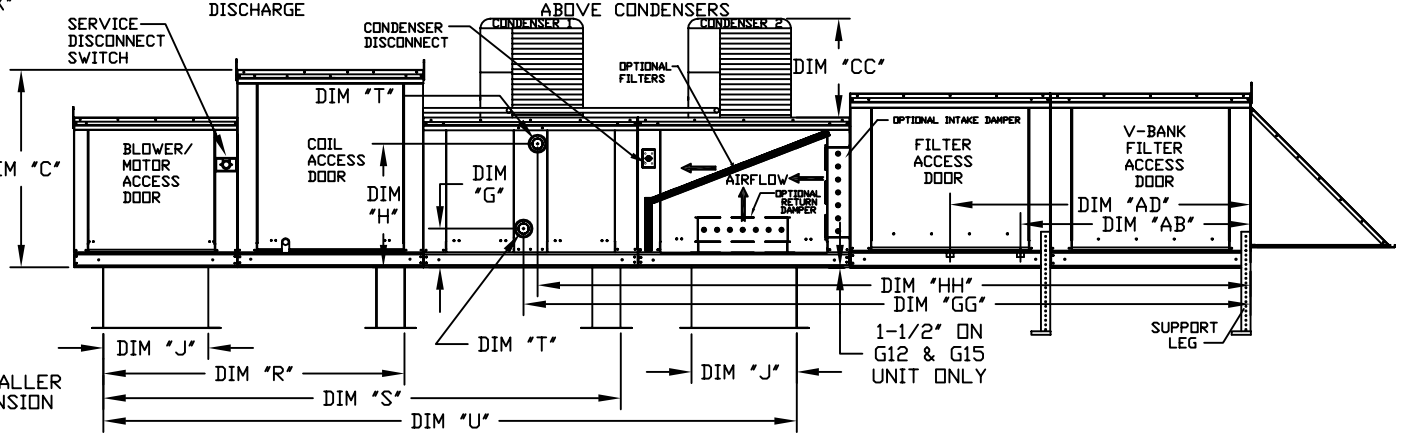

ALL DIMENSIONS ARE NOMINAL AND GIVEN IN INCHES.

	UNIT DIMENSIONS															DISCHARGE OPENING				TONNAGE RANGE		WATER INLET		DRAIN OPENING	
MODEL	A	B	C	D	E	F	J	K	L	M	N	P	R	S	U	V	W	X	Y	MIN	MAX	AA	AB	AC	AD
G10	223-3/8	39-3/8	42-3/4	39	3-3/4	30-5/16	21	14	8	14	12-1/2	18	65-13/16	107-15/16	140-7/8	13-1/4	11-1/2	3-7/8	1-3/4	2 Ton	5 Ton	4-1/2	38-1/2	18	48-1/4
G12	243-3/8	49-3/8	47-3/4	44	3-3/4	34-3/16	31	22-3/4	8	11	7-1/2	24	74-5/8	116-3/4	154-7/8	15-3/4	13-9/16	7-5/8	7-15/16	5 Ton	10 Ton	4-1/2	44	20	57-1/4
G15	243-3/8	49-3/8	47-3/4	44	3-3/4	34-3/16	31	22-3/4	8	11	7-1/2	24	74-5/8	116-3/4	154-7/8	18-3/4	16	6-1/8	5-1/2	5 Ton	10 Ton	4-1/2	44	20	57-1/4
G18	242-5/8	54-3/8	56-3/8	51-1/8	5-1/4	47-1/4	35	28	8	7	4-1/2	30	79-3/16	121-5/16	162-3/8	22	19	6-1/2	7	10 Ton	10 Ton	4-1/2	41-1/8	23-1/2	52-7/8
920	297-7/8	60-7/16	64-3/8	59-1/8	5-1/4	49-5/8	42	33	10	11	8	36	104-9/32	158-15/32	208	24-7/8	24-7/8	8-9/16	1-1/8	10 Ton	10 Ton	4-1/2	41-1/8	28-7/8	52-7/8

HOT WATER COIL MODULE

	TOTAL CAPACITY	PIPE CONNECTION				
MODEL	(MBH)	"T" (MPT)	G	GG	H	HH
G10	165.63	2	8-1/4	129-3/16	24-3/4	126-7/16
G12	320.88	2	8-1/4	141-3/16	28-3/4	138-7/16
G15	320.88	2	8-1/4	141-3/16	28-3/4	138-7/16
G18	514.97	1-1/2	9-1/2	135-3/16	38	132-15/16
920	831.87	2-1/2	10	153-5/8	45-1/2	150

STEAM COIL MODULE

	TOTAL CAPACITY	PIPE CONNECTION	STEAM				
MODEL	(MBH)	"T" (MPT)	PSI	G	GG	H	HH
G10	176.49	2-1/2	5	8-3/4	127-13/16	16-15/16	127-13/16
G12	328.19	2-1/2	5	8-3/4	139-13/16	18-3/8	139-13/16
G15	328.19	2-1/2	5	8-3/4	139-13/16	18-3/8	139-13/16
G18	505.64	2-1/2	5	10-1/4	134-1/16	23-5/8	134-1/16
920	812.24	2-1/2	5	10-1/4	152-3/16	28-5/8	152-3/16

V-BANK FILTER

MODEL	FILTER SIZE & QTY
G10	16"x20"x2" (8)
G12	20"x25"x2" (8)
G15	20"x25"x2" (8)
G18	16"x20"x2" (15)
920	20"x25"x2" (12)

CELDEK EVAPORATIVE COOLING UNIT W/

HOT WATER COIL MODULE			STEAM COIL MODULE				
MODEL	TOT. WEIGHT		TOT. WEIGHT	MEDIA SIZE & QTY	NOZZLES	MAX. FLOW RATE
G10	1220 LBS		1220 LBS	25"x32"x12"	20	6.5 GPH
G12	1660 LBS		1660 LBS	30"x36"x12"	28	8.4 GPH
G15	1670 LBS		1670 LBS	30"x36"x12"	28	8.4 GPH
G18	2115 LBS		2110 LBS	38"x43"x12"	35	10.15 GPH
920	3220 LBS		3195 LBS	45"x54"x12"	42	12.6 GPH

OPTIONAL MIXING BOX FILTERS
FILTER SIZE & QTY
10"x16"x2" (5)
20"x25"x2" (2), 16"x25"x2" (1)
20"x25"x2" (2), 16"x25"x2" (1)
15"x20"x2" (4), 15"x15"x2" (2)
18"x25"x2" (4), 16"x20"x2" (2)

*ADD CONDENSING UNIT WEIGHT TO WEIGHT IN TABLES ABOVE