OUTDOOR DOWN DISCHARGE MOD PACKAGE UNIT, V-BANK, SCREEN INTAKE AND OPTIONAL MIXING BOX

SIVBMBCCDAH-MP
REV.#2 06/15/20

CONDENSER INFORMATION						
MODEL	WEIGHT*	TONNAGE #1	TONNAGE #2	CC	DD	EE
2 TON-G10	119 LBS	2 TON	N/A	26-5/16	56-1/16	52-3/8
3 TON-G10	134 LBS	3 TON	N/A	33-5/16	63-1/16	59-3/8
5 TON-G10	253 LBS	2 TON	3 TON	33-5/16	63-1/16	59-3/8
5 TON-G10	302 LBS	2.5 TON	2.5 TON	32-13/16	62-9/16	58-7/8
5 TON-G12	197 LBS	5 TON	N/A	32-13/16	69-9/16	65-7/8
7.5 TON-G12	348 LBS	2.5 TON	5 TON	32-13/16	69-9/16	65-7/8
10 TON-G12	394 LBS	5 TON	5 TON	32-13/16	69-9/16	65-7/8
5 TON-G15	197 LBS	5 TON	N/A	32-13/16	69-9/16	65-7/8
7.5 TON-G15	302 LBS	2.5 TON	5 TON	32-13/16	69-9/16	65-7/8
8 TON-G15	331 LBS	3 TON	5 TON	33-5/16	71-11/16	68
10 TON-G15	394 LBS	5 TON	5 TON	32-13/16	69-9/16	65-7/8
10 TON-G18	394 LBS	5 TON	5 TON	32-13/16	76-3/16	70-7/8
10 TON-920	394 LBS	5 TON	5 TON	32-13/16	97-3/16	91-15/16

R410A REFRIGERANT

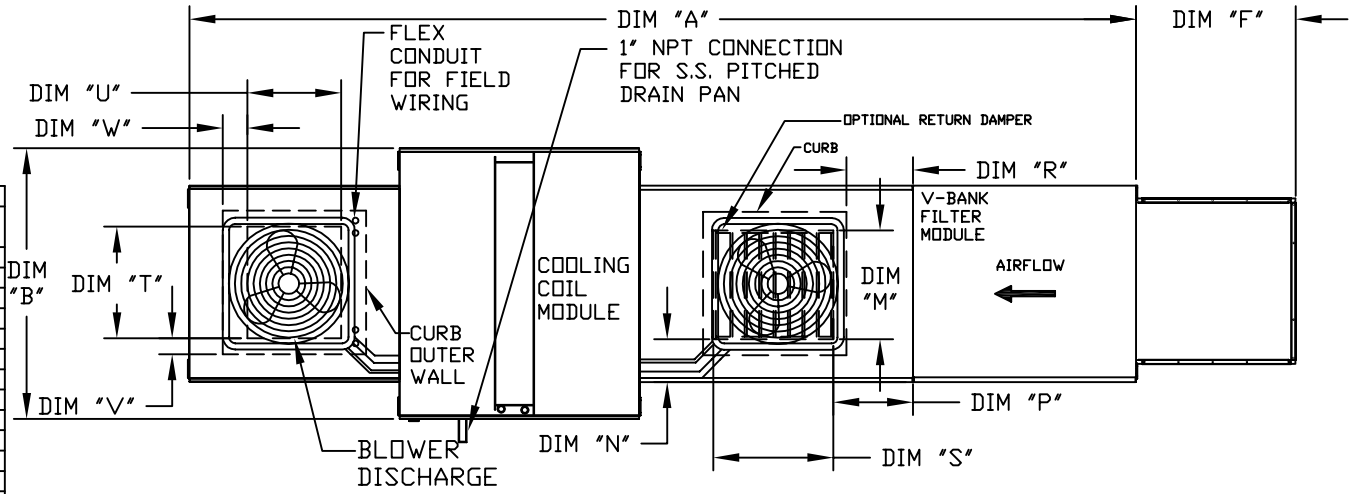

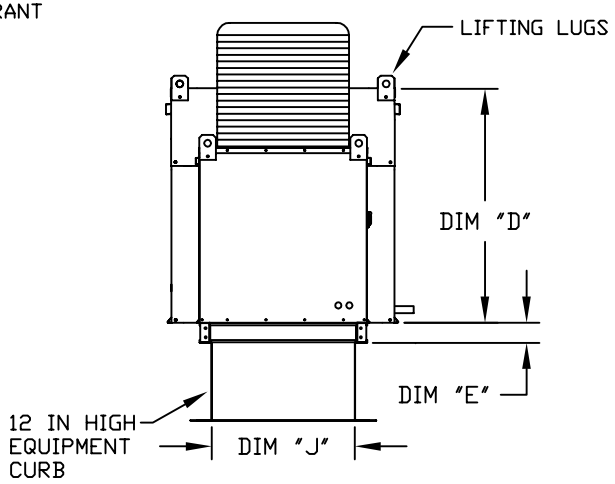

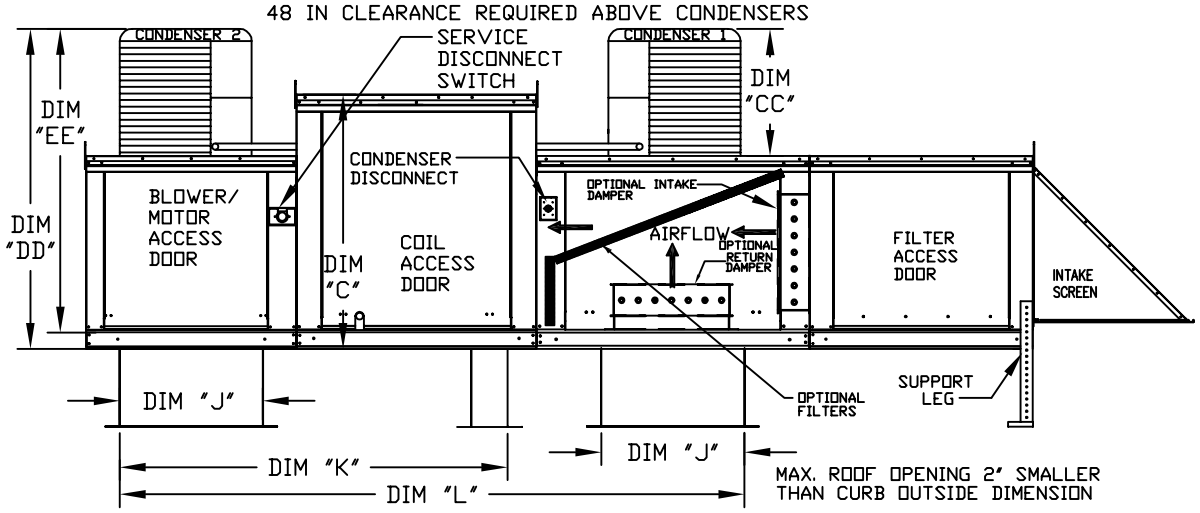

ALL DIMENSIONS ARE NOMINAL AND GIVEN IN INCHES.

		UNIT DIMENSIONS									RETURN OPENING					DISCHARGE OPENING				TONNAGE RANGE	
MODEL	WEIGHT*	A	B	C	D	E	F	J	K	L	M	N	P	R	S	T	U	V	W	MIN	MAX
G10	835 LBS	148-7/8	39-3/8	42-3/4	39	3-3/4	22-3/8	21	65-13/16	98-5/8	14	8	14	12-1/2	18	13-1/4	11-1/2	3-7/8	1-3/4	2 Ton	5 Ton
G12	1165 LBS	156-7/8	49-3/8	47-3/4	44	3-3/4	30-5/16	31	74-5/8	112-5/8	22-3/4	8	11	7-1/2	24	15-3/4	13-9/16	7-5/8	7-15/16	5 Ton	10 Ton
G15	1175 LBS	156-7/8	49-3/8	47-3/4	44	3-3/4	30-5/16	31	74-5/8	112-5/8	22-3/4	8	11	7-1/2	24	18-3/4	16	6-1/8	5-1/2	5 Ton	10 Ton
G18	1435 LBS	167-7/8	54-3/8	56-3/8	51-1/8	5-1/4	34-3/16	35	79-3/16	120-1/8	28	8	7	4-1/2	30	22	19	6-1/2	7	10 Ton	10 Ton
920	2325 LBS	208-3/16	60-7/16	64-3/8	59-1/8	5-1/4	47-1/4	42	104-9/32	153-15/16	33	10	11	8	36	24-7/8	24-7/8	8-9/16	1-1/8	10 Ton	10 Ton

UNIT INFORMATION

MODEL	FILTER SIZE & QTY	MAX. FILTER VELOCITY
G10	20"x25"x2" (3)	@3500 CFM = 406 FPM
G12	16"x20"x2" (8)	@5000 CFM = 358 FPM
G15	16"x20"x2" (8)	@6000 CFM = 429 FPM
G18	20"x25"x2" (8)	@8000 CFM = 348 FPM
920	16"x20"x2" (15)	@15000 CFM = 572 FPM

*ADD CONDENSING UNIT WEIGHT TO WEIGHT IN TABLE ABOVE

OPTIONAL MIXING BOX FILTERS
10"x16"x2" (5)
20"x25"x2" (2), 16"x"25"x2" (1)
20"x25"x2" (2), 16"x"25"x2" (1)
15"x20"x2" (4), 15"x15"x2" (2)
18"x25"x2" (4), 16"x20"x2" (2)