OUTSIDE DOWN DISCHARGE MOD PACKAGE UNIT, HEATING COIL, V-BANK FILTER, EVAPORATIVE COOLER INTAKE, SCREEN INTAKE AND OPTIONAL MIXING BOX

SIVBECMBHCCCDAH-MPU
REV.#2 06/15/2015

CONDENSER INFORMATION						
MODEL	WEIGHT*	TONNAGE #1	TONNAGE #2	CC	DD	EE
2 TON-G10	119 LBS	2 TON	N/A	26-5/16	56-1/16	52-3/8
3 TON-G10	134 LBS	3 TON	N/A	33-5/16	63-1/16	59-3/8
5 TON-G10	253 LBS	2 TON	3 TON	33-5/16	63-1/16	59-3/8
5 TON-G10	302 LBS	2.5 TON	2.5 TON	32-13/16	62-9/16	58-7/8
5 TON-G12	197 LBS	5 TON	N/A	32-13/16	69-9/16	65-7/8
7.5 TON-G12	348 LBS	2.5 TON	5 TON	32-13/16	69-9/16	65-7/8
10 TON-G12	394 LBS	5 TON	5 TON	32-13/16	69-9/16	65-7/8
5 TON-G15	197 LBS	5 TON	N/A	32-13/16	69-9/16	65-7/8
7.5 TON-G15	302 LBS	2.5 TON	5 TON	32-13/16	69-9/16	65-7/8
8 TON-G15	331 LBS	3 TON	5 TON	33-5/16	71-11/16	68
10 TON-G15	394 LBS	5 TON	5 TON	32-13/16	69-9/16	65-7/8
10 TON-G18	394 LBS	5 TON	5 TON	32-13/16	76-3/16	70-7/8
10 TON-920	394 LBS	5 TON	5 TON	32-13/16	97-3/16	91-15/16

*410A REFRIGERANT

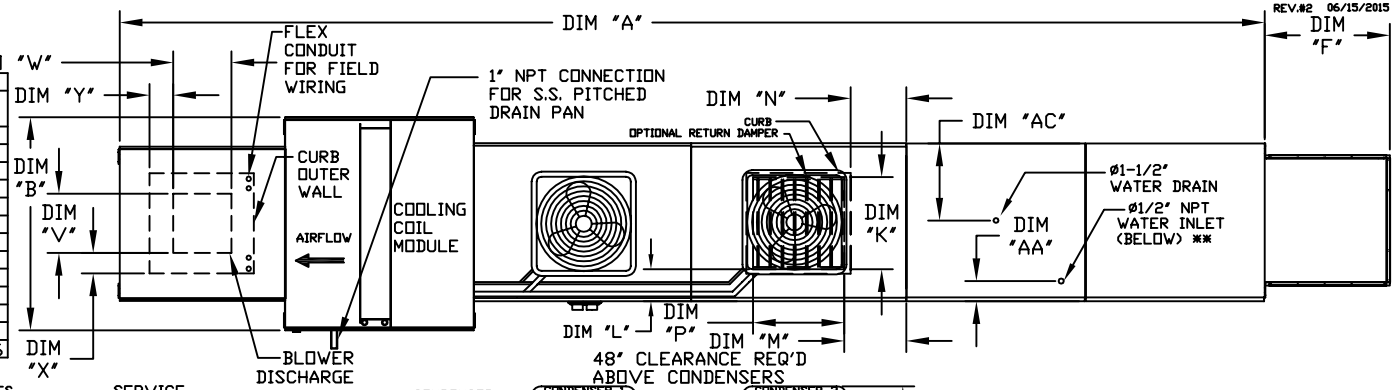

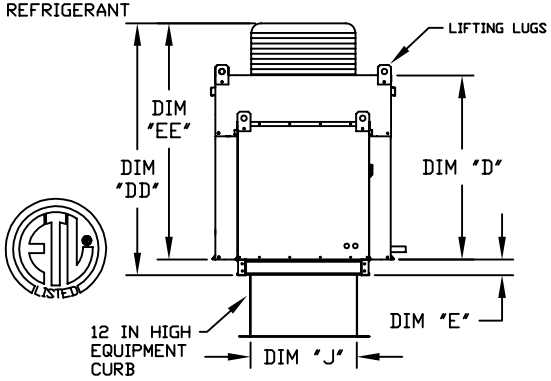

MAX. ROOF OPENING 2" SMALLER THAN CURB OUTSIDE DIMENSION

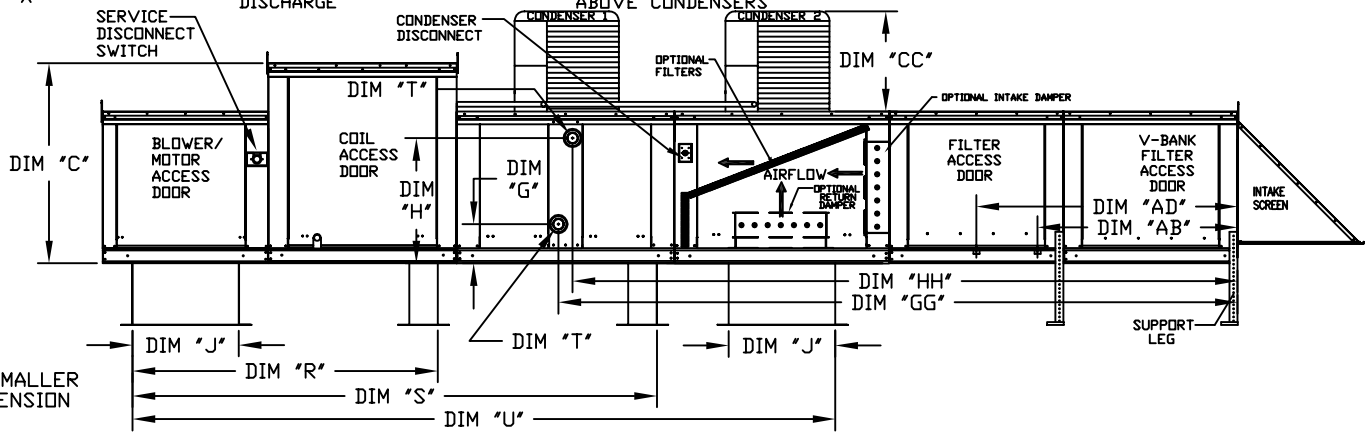

ALL DIMENSIONS ARE NOMINAL AND GIVEN IN INCHES.

	UNIT DIMENSIONS															DISCHARGE OPENING				TONNAGE RANGE		WATER INLET		DRAIN OPENING	
MODEL	A	B	C	D	E	F	J	K	L	M	N	P	R	S	U	V	W	X	Y	MIN	MAX	AA	AB	AC	AD
G10	223-3/8	39-3/8	42-3/4	39	3-3/4	22-3/8	21	14	8	14	12-1/2	18	65-13/16	107-15/16	140-7/8	13-1/4	11-1/2	3-7/8	1-3/4	2 Ton	5 Ton	4-1/2	38-1/2	13	48-1/4
G12	231-3/8	49-3/8	47-3/4	44	3-3/4	30-5/16	31	22-3/4	8	11	7-1/2	24	74-5/8	116-3/4	154-7/8	15-3/4	13-9/16	7-5/8	7-15/16	5 Ton	10 Ton	4-1/2	38-1/2	18	48-1/4
G15	231-3/8	49-3/8	47-3/4	44	3-3/4	30-5/16	31	22-3/4	8	11	7-1/2	24	74-5/8	116-3/4	154-7/8	18-3/4	16	6-1/8	5-1/2	5 Ton	10 Ton	4-1/2	38-1/2	18	48-1/4
G18	248-3/8	54-3/8	56-3/8	51-1/8	5-1/4	34-3/16	35	28	8	7	4-1/2	30	79-3/16	121-5/16	162-3/8	22	19	6-1/2	7	10 Ton	10 Ton	4-1/2	44	20	57-1/4
920	297-7/8	60-7/16	64-3/8	59-1/8	5-1/4	47-1/4	42	33	10	11	8	36	104-9/32	158-15/32	208	24-7/8	24-7/8	8-9/16	1-1/8	10 Ton	10 Ton	4-1/2	41-1/8	23-1/2	52-7/8

HOT WATER COIL MODULE

	TOTAL CAPACITY	PIPE CONNECTION				
MODEL	(MBH)	"T" (MPT)	G	GG	H	HH
G10	165.63	2	8-1/4	129-3/16	24-3/4	126-7/16
G12	320.88	2	8-1/4	129-3/16	28-3/4	126-7/16
G15	320.88	2	8-1/4	129-3/16	28-3/4	126-7/16
G18	514.97	1-1/2	9-1/2	140-15/16	38	138-11/16
920	831.87	2-1/2	10	153-5/8	45-1/2	150

STEAM COIL MODULE

	TOTAL CAPACITY	PIPE CONNECTION	STEAM				
MODEL	(MBH)	"T" (MPT)	PSI	G	GG	H	HH
G10	176.49	2-1/2	5	8-3/4	127-13/16	16-15/16	127-13/16
G12	328.19	2-1/2	5	8-3/4	127-13/16	18-3/8	127-13/16
G15	328.19	2-1/2	5	8-3/4	127-13/16	18-3/8	127-13/16
G18	505.64	2-1/2	5	10-1/4	139-13/16	23-5/8	139-13/16
920	812.24	2-1/2	5	10-1/4	152-3/16	28-5/8	152-3/16

V-BANK FILTER

MODEL	FILTER SIZE & QTY	MAX. FILTER VELOCITY
G10	20"x25"x2" (3)	@3500 CFM = 406 FPM
G12	16"x20"x2" (8)	@5000 CFM = 358 FPM
G15	16"x20"x2" (8)	@6000 CFM = 429 FPM
G18	20"x25"x2" (8)	@8000 CFM = 348 FPM
920	16"x20"x2" (15)	@15000 CFM = 572 FPM

STANDARD EVAPORATIVE COOLING UNIT W/

	MODEL	TOT. WEIGHT		TOT. WEIGHT	MEDIA SIZE & QTY	VEL. @ MAX. CFM	NOZZLES	MAX. FLOW RATE
HOT WATER COIL MODULE	G10	1125 LBS	STEAM COIL MODULE	1125 LBS	20"x25"x2" (3)	406 FPM	6	3 GPH
	G12	1565 LBS		1565 LBS	16"x20"x2" (8)	358 FPM	10	5 GPH
	G15	1575 LBS		1575 LBS	16"x20"x2" (8)	429 FPM	10	5 GPH
	G18	1935 LBS		1930 LBS	20"x25"x2" (8)	348 FPM	14	7 GPH
	920	3090 LBS		3065 LBS	16"x20"x2" (15)	572 FPM	24	12 GPH

CELDEK EVAPORATIVE COOLING UNIT W/

	MODEL	TOT. WEIGHT		TOT. WEIGHT	MEDIA SIZE & QTY	VEL. @ MAX. CFM	NOZZLES	MAX. FLOW RATE
HOT WATER COIL MODULE	G10	1130 LBS	STEAM COIL MODULE	1130 LBS	20"x24"x12"	1050 FPM	12	3.9 GPH
	G12	1560 LBS		1560 LBS	25"x32"x12"	900 FPM	20	6.5 GPH
	G15	1570 LBS		1570 LBS	25"x32"x12"	1080 FPM	20	6.5 GPH
	G18	1925 LBS		1920 LBS	30"x36"x12"	1067 FPM	28	8.4 GPH
	920	3060 LBS		3035 LBS	38"x43"x12"	1322 FPM	35	10.15 GPH

OPTIONAL MIXING BOX FILTERS

FILTER SIZE & QTY
10"x16"x2" (5)
20"x25"x2" (2), 16"x25"x2" (1)
20"x25"x2" (2), 16"x25"x2" (1)
15"x20"x2" (4), 15"x15"x2" (2)
18"x25"x2" (4), 16"x20"x2" (2)

* ADD WEIGHT FROM CONDENSER TABLE TO WEIGHTS IN TABLES ABOVE

** MAX EVAP WATER PRESSURE = 50 PSI @ 70 DEG F